DBV VALVE CO.,LTD

E-mail:info@dbv-armaturen.com

www.dbv-armaturen.com www.dombor.com

Tel: +86-577-67387723 Fax: +86-577-67383000

Add:No.98 Fanhua East Road,OuBei,WenZhou,Zhejiang,China

DBV Website linkedin instagram youtube facebook

Gate,Globe, Check Valve Product Catalogue

DBV VALVE CO.,LTD

CATALOG

DBV
DBV VALVE CO.,LTD

VALVE SOLUTION PROVIDER

Leader in the development of butterfly valves and ball valves

CE API-609 API-6D ATEX SIL-3 CU-TR ISO9001

DBV

Part One
About DBV

Premier Manufacturer of High-quality Custom Valves

DBV History:

DBV valve was founded in 2001.Our company created two valve brands "DBV" and "Dombor".

In 2017, the founder led the team to return to Oubei, the hometown of Chinese valves in Wenzhou, and set up the company headquarters of DBV in Wenzhou, and established professional sales and service networks in Shanghai and Wenzhou. The headquarters company has production workshops for butterfly valves, ball valves, gate valves, Globe Valves and check valves.

DBV Quality Control:

Advanced physical and chemical test center,professional CNC processing,pressure testing,automatic production facilities and experienced technical.production team.

achieving all kin ds of certificates such as
API6D,API609,API607,API6FA,CE,ISO9001,ISO158481,ISO14001,ISO45001,TS,ATEX,SIL3,CU-TR.....

DBV History

2001 - 2009

Gavin and Sea established DBV, an industrial valve brand for a wide business range in 2001. In the following years, we passed the ISO9001 quality management system certification by making our production capabilities compliant with global standards as well as passing TS-related certification.

2010 - 2016

The creation of our full series of hard-sealed butterfly valves was successfully developed during 2010-2011. In 2015, we produced our first ultra-high-pressure 1500# valve and the DN2600 (104 inches) large-diameter all-metal flange hard sealed butterfly valve.

2017 - 2019

In 2017, the company's leadership made a major decision to set Wenzhou as the headquarters of DBV and set up a sales team in Shanghai.The non-regional industry company DBV was established in Wenzhou in 2018.

This factory has 20,000 square meters of workspace, high-end processing equipment & testing equipment, and an established valve test center. Till 2019, the company achieved an annual output of 5,000 tons of valves, providing us with good economic benefits.

2020 - Now

In 2020, DBV obtained a series of national and international authoritative certifications such as the TS license for special equipment manufacturing, CE, API, and SIL3. Since 2020, we have actively responded to the global epidemic, ensuring production and providing high-quality products. DBV is always on the way to become a better industry leader.

Innovation for sustainability

DBV Valve continues to excel in trend-setting R&D and sustainability practices to Valve performance for every valve product.reduce costs and ensure optimal performance for every valve product.

have allowed us to earn numerous intellectual property rights and quality certifications.have allowed us to earn numerous intellectual property rights and quality certifications.

Professional Service

Providing constant our production cycle, our team also handles on-site technical training andhandles on-site technical

Production StrengthProduction Strength

With a factory employing 5With a factory employing 5 production lines and numerousproduction lines and numerous machines, we easily produce up to 8,000 tons of valves

Strict Quality Control

In conjunction with third party inspection, each valve is tested in a certified laboratory using advanced testing equipment prior to delivery.

R&D Capabilities R&D Capabilities

With over 15 years of experience, our team continues to provide the latest valve solutions with industry and market trends.

20 Y20 Years of ears of ExperienceExperience

Since 2001, we have been running an efficient production system, constantly innovating our valves to obtain efficient global resources.

Part Two
Quality Control

We Take Pride in Our High-Quality Work

Understanding how important product quality is to the success of a brand, DBV places a premium on maintaining high-quality standards in both our valves and our services.

Devoting human and financial resources, along with our commitment to quality, we always perform at our best to manufacture reliable valves that surpass global certification requirements.

DBV Valve

Making Things Better

Experienced Quality Inspection Team

With over 10 years of experience in the industry, our expert team of quality inspectors has the right skill set to ensure our valves pass global standards.

Professional Laboratory

Product and material testing is handled in-house via our testing laboratory, equipped with the latest testing equipment comparable to third-party professional facilities.

International Certificates

Conducting various tests and witness auditing,we have obtained most completely certificate: API 6D, API609,API607,API6FA,SIL3,CE,ISO9001, ISO18001,TS,CU-TR 010/032,ISO 15848-1(fugitive emission certificate).

Branded and Reliable Raw Materials

Carbon Steel
WCB, LCB, WCC, LC1, A105, LF2

Stainless Steel
CF8, CF8M, CF3, CF3M, 310S, 904L, F304, F316, F304L, F316L, CF8C, F347

Cr-mo Alloy
WC6, WC9, C5, C12A, F11, F22, F5, F91

Duplex Stainless Steel
4A, 5A, 6A, F51, F53, F55, CK3MCUN, CD4MCU, CK20

Copper Alloy
C95800, C95500, C83600

Monel Alloy
MONEL 400, MONEL 500, M35-1

Inconel Alloy
INCONEL600, INCONEL 625, INCONEL 800

Ti Alloy
TITANIUM GR2, GR3, GR5, GR12

Hast Alloy
HAST ALLOY C276

Key Part of Quality Management and Assurance

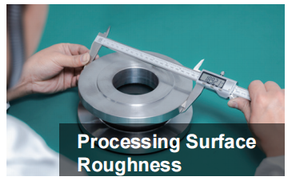

Part Three
Our Equipment

5
Production Lines

20000 ㎡
Manufacturing Area

8000tons
Annual Output

$32 Million
Total annual sales (US$)

Machinery for Highly Efficient Valve Production

52 Sets of CNC Machinesv

2.5-meter Vertical Lathe

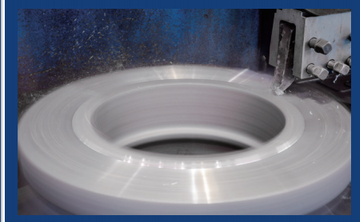

8 Sets of 1.6-meter Vertical Lathes

DBV Valve

DBV Capabilities at a Glance

A major pillar in our continued success as a global valve manufacturer is our fully-functional production facility, packed with state-of-the-art processing equipment and talented staff.

- Rough Machining
- Fine Machining
- Heat Treating
- Boring
- Surface Finishing
- Drilling

How We Handle Details Makes Us Different

The performance, durability, and service life of DBV industrial valves come from how we process and prepare each of our raw materials: properly, with great attention to detail.

Part Four
Our Parters

Win-Win Partnership

With a wide range of industrial valves, DBV can cooperate with any kind of client.

When you are constructing or forming a valve system, you need a specific solution for your project requirements. DBV can assist you with our full-service support as well as system maintenance programs for all of your orders.

To provide the right valve solutions for all your customers, you need a diverse range of industrial valves that fits their needs. Working with DBV gives you a rich selection of pump valves for any of your clients.

Benefits from Cooperation

Design Confirmation

Expert designers create practical valve designs based on the data acquired during the consultation, along with any special requirements you may have. The completed design is forwarded to you, ensuring that the design specifications capture your unique branding or marketing concepts.

After getting your approval, the design is then forwarded to our production team for sample making.

30-Day Lead Time

Customized valve orders take a maximum of 30 days for completion, including the prototyping phase.

For standard orders, OEM requests, or urgent purchases, our warehouse is packed with stock standard parts, allowing our team to complete your orders within 7 days from the date of your request.

DBV

Value-Added Delivery

As we value your business with us, we add free accessories to your purchase at the time of shipment, amounting to 10% of the total order amount.

Per request, we can also include additional documents to the shipment, like product parame-ters, test results, and other important information.

Responsive After-Sales Service

All valves from DBV come with a 24-month warranty period that covers technical assis-tance, on-site repairs, and free product replacements.

Professional aftersales team handles your concerns via email and video calls, while our on-site technical support staff are certified experts in the field and provide fast, effective solutions for any kind of issues.

STANDARD FEATURES OF DBV CAST STEEL VALVES

LOW FUGITIVE EMISSION SERVICE

DBV standard Cast Steel Gate, Globe and Check Valves are designed and manufactured to ensure leakage of less than 100 ppm (parts per million) of volatile organic compounds. Extensive base line laboratory testing (static and cycle testing) has been performed establishing critical design parameters necessary to achieve low emission sealing in the DBV stem packing seal area for Gate and Globe Valves and in the bonnet gasket sealing area (cover gasket for Check Valves).

In-house testing procedure has been developed and is periodically performed to ensure that standard product design and manufacturing criteria consistently result in the DBV Gate, Globe and Check Valve meeting a maximum of 100 ppm VOC leakage prior to shipment.

CRITICAL DESIGN AND MANUFACTURING CONTROLS APPLIED TO PRODUCE LOW EMISSION SERVICE VALVES IN DBV STANDARD PRODUCTS.

Stem Straightness and Roundness
Stem Surface Finish To Max. 32 Ra
Stuffing Box Surface Finish To Max. 125 Ra
Stuffing Box and Gland Cylindricity
Self Centering Gland Design
Gland Packing: Die-formed Graphite Rings with Braided Graphite Top and Bottom Rings.
Bonnet Gaskets:
Class 150 Gate: 316 SS Tanged Clad Graphite
Class 150 Globe & Check: 316 SS Spiral Wound Grafoil
Class 300 Valves: 316 SS Spiral Wound
Class 600 & Higher: Ring Type Joint

LOW EMISSION DESIGN OPTIONS LIVE LOAD PACKING

In services requiring frequent cycling or with high pressure/temperature variations, live loading extends the service life between maintenance periods by requiring less frequent packing gland adjustments. Belleville springs are employed to provide constant packing gland stress.

Lantern Ring and Double Packing Set
Lantern ring with leak-off fitting connection and double packing stack is optionally available for critical services.

PACKING SYSTEM

DBV Cast Steel Gate and Globe valves use a combination of die formed flexible graphite and interbraided graphite in a predetermined arrangement to ensure an effective seal. Graphite packing achieves its maximum ability to isolate the atmosphere when it is contained within a chamber that is precise in finish and dimension. DBV Gate and Globe valves are manufactured with stem finishes better than 32 Ra and stuffing box wall finishes for 125 Ra. In addition, stem straightness and taper are closely controlled.

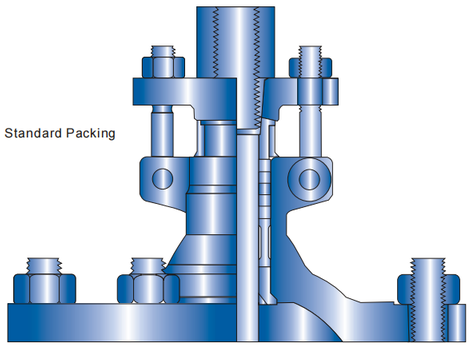

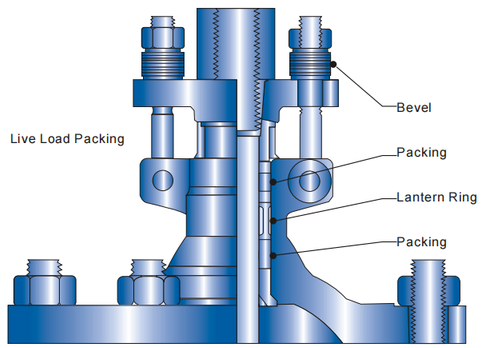

AVAILABLE MODIFICATIONS FOR DBV CAST STEEL VALVES

Packing and Gasket Changes
End Connection Modifications
Gear Operator Mounting
Trim Changes
Actuation
Cryogenic Gas Columns
Hand Wheel Extensions
Teflon Disc Inserts
Drilled & Tapped Body/Bonnet Connections
By-Pass
Pressure Equalizing
Acid Shields
Oxygen & Chlorine Cleaning & Packaging

Weld End Bore Changes
Customer Specified Coatings
Outside Lever and Weight for Check Valves
Slam Retarders for Check Valves
Chain Wheel Operator
Block and Bleed

NDE Testing Available
Dye Penetrant Test
Magnetic Particle Test
Radiography
PMI (Positive Material Identification)
API Performance Testing

BODY/BONNET MATERIALS

DBV cast steel valves are available in a wide range of body/bonnet materials and optional trim materials. Listed below are some of the more popular materials. Additional materials are available. Please contact DBV or your local distributor for details.

DBV Material Designation	Common Description	ASTM Specs.	Body/Bonnet Material Service Limitations
WCB	Carbon Steel	A216	Non-corrosive service water, oil, & gases at temperatures between -20° F & +800° F
LCC	Low Temp Carbon	A352	Low temperature service between -50° F & +650° F
WC6	1.25% Chrome & .5% Moly	A217	Non-corrosive service water, oil, & gases at temperatures between -20° F & +1100° F
WC9	2.25% Chrome & 1% Moly	A217	Non-corrosive service water, oil, & gases at temperatures between -20° F & +1100° F
C5	5% Chrome & .5% Moly	A217	Corrosive, non-corrosive, or erosive service at temperatures between -20° F & +1200° F
C12	9% Chrome & 1% Moly	A217	Corrosive, non-corrosive, or erosive service at temperatures between -20° F & +1200° F
C12A	9% Chrome, 1% Moly, & V	A217	Corrosive, non-corrosive, or erosive service at temperatures between -20° F & +1200° F
C8M	Cast 316	A351	Corrosive, cryogenic or high temperature service between -450° F & +1200° F
A20	Alloy 20	A351	Corrosive service at temperatures between -20° F & +300° F

TRIM MATERIALS
THE FOLLOWING ARE DBV STANDARD TRIM DESIGNATIONS.

DBV Trim Number	Common Name	API 600 Trim No.	Seat Ring Facing (1)	Wedge or Disc Facing (1)	Stem	Other Trim Parts (2)	Service Limitations
1	13 Chrome	1	CR 13	CR 13	CR 13	CR 13	Non-corrosive applications. Steam, gas, & general service to 700° F. Oil & oil vapor to 900° F
2	Half Stellite	8	HF	CR 13	CR 13	CR 13	Steam, gas, & general service to 1000° F. Standard trim for gate valves
3	Full Stellite	5	HF	HF	CR 13	CR 13	Premium trim service to 1200° F. Excellent for high pressure water and steam service
4	316	10	316	316	316	316	Corrosive services to 850° F. Low temperature service standard for 316 SS valves
4/3	316/Half Stellite	12	HF	316	316	316	
5	316/Full Stellite	16	HF	HF	316	316	
5/2	Monel	9	NiCu	NiCu	NiCu	NiCu	Corrosive services to 750° F
5/3	Monel/Half Stellite	11	HF	NiCu	NiCu	NiCu	
6	Monel/Full Stellite	-	HF	HF	Nicu	NiCu	
7	Alloy 20	13	A20	A20	A20	A20	Corrosive services to 300° F
7	Bronze	-	BRZ	BRZ	BRZ	BRZ	Water, gas, or low pressure steam to 450° F
A7	Aluminum Bronze	-	AL BRZ	AL BRZ	AL BRZ	AL BRZ	
8	Iron	-	Iron	Iron	STL	Iron or STL	
X	Special	Special	Special	Special	Special	Special	Customer to specify

(1) Facing is defined as the seating surface of a seat ring and wedge/disc
(2) Other trim parts are defined as small internal parts that are normally in contact with the service fluid. This includes the stem, backseat bushing in gate and globe valves and the swing check disc nut

AUXILIARY CONNECTION LOCATIONS (BYPASSES, DRAINS, ETC.)

Please refer to ASME B16.34 for exact auxiliary connection locations, sizes, and threading information.

Each letter in the illustration(s) identify the possible hole locations for auxiliary connection(s). These illustrations are for reference purposes only.

Unless specified otherwise, auxiliary connection hole sizes shall be drilled and tapped as follows:
- 2" thru 4" utilizes a .50" hole
- 5" thru 8" utilizes a .75" hole
- 10" and larger utilizes a 1" hole

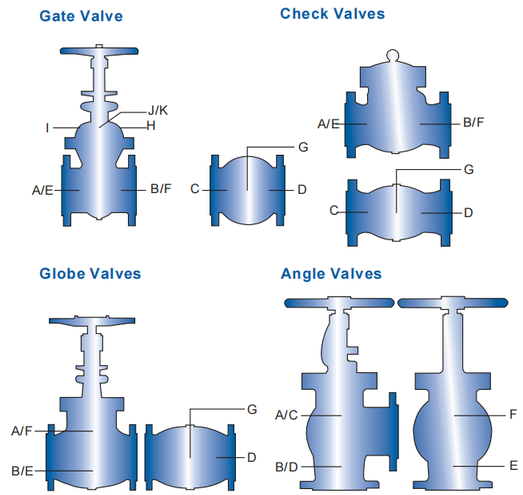

O-RING SEAL BLOCK & BLEED GATE VALVES

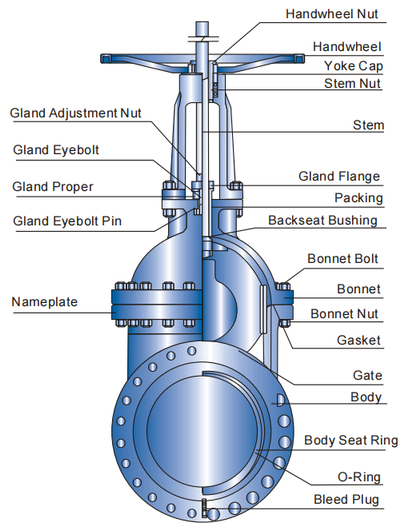

FIRE SAFE, VAPOR TIGHT SHUT-OFF

Should fire occur burning or damaging the O-Ring seal, metal to metal seats will provide an effective fire-safe shut-off.

SERVICE RECOMMENDATIONS

DBV O-Ring Seal Block and Bleed Gate Valves are recommended for hard to hold services such as butane, kerosene, gasoline, propane, diesel oils, fuel oils, jet fuels, steam, air, natural gas, toluene, hydrogen, helium, and oxygen. Manifold tank farms, LPG areas, and airport fueling facilities provide excellent opportunities for savings with the O-Ring Seal Gate Valves. For effective double block and bleed service, the line media should be free of foreign matter and solids in suspension.

DESIGN FEATURES

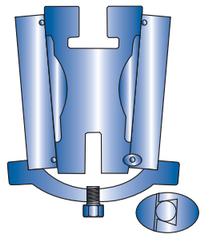

The dovetail groove feature in the seat ring holds the O-Ring seal in place while allowing it to expand or contract during service and still maintains the proper compression to provide uniform sealing.

The precision ground metal to metal seats with the O-Ring feature as secondary seal provides dual seating and eliminates any media contamination.
A bleed plug is provided at position G to verify shut-off.

SEAT MATERIALS

Teflon is considered our standard. It is the most widely used elastomer because of its resistance to corrosive and abrasive conditions. We can also offer other materials. Seat insert materials should be specified along with actual service conditions when ordering.

Type	Temperature Operating Range
Teflon PTFE	-100° F+400° F

CAST STEEL CRYOGENIC GATE, GLOBE AND CHECK VALVES

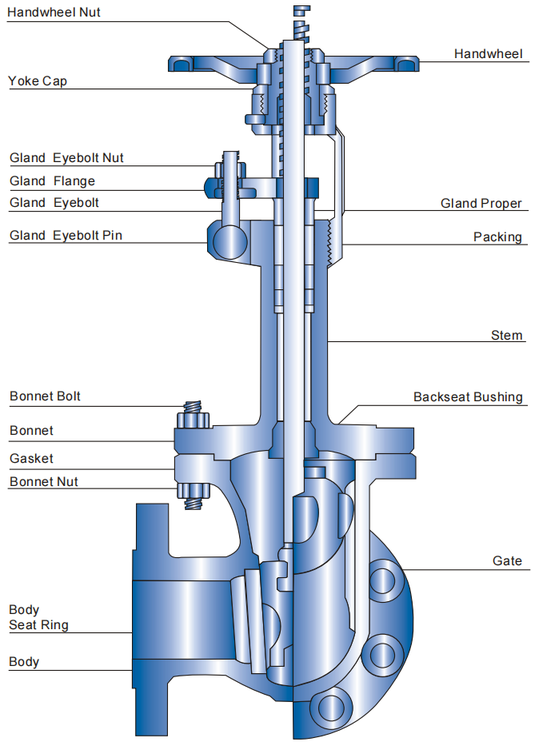

DBV Cryogenic Valves are manufactured to the latest edition of API Standard 600 and/or 603 and tested to API Standard 598.

APPLICATION & FUNCTION

During the processes of production, transportation, storage and usage of liquefied gases, countless technical problems can be experienced. DBV cryogenic valves are designed to assure safety and reliability under these critical conditions.

All of DBV cryogenic valves are thoroughly cleaned and decreased. Afterwards the end ports are sealed to prevent contamination. This process is performed in an approved and designated clean room.

BODY & BONNET

The design of the body and bonnet is calculated to achieve the most regular distribution of stress in all directions, as well as the minimum turbulence and resistance to flow.

The extended bonnet provides a gas column which thermally isolates the stem packing and stem nut from the extreme temperatures so they remain functional. Usually the customer specifies the column length.

The body-bonnet joint is bolted using applicable ASTM specified bolting for low temperature/cryogenic conditions.

GASKET

We can supply any style of gasket required by our customer; however, we recommend gaskets that are oxygen compatible.

CLOSURES

GATE VALVES-All gates are fully guided to the seats. As standard, our valves are supplied with a stellite faced, solid flexible gate that has a tapered H cross-section. The flexible wedge is cast or machined with a circumferential groove to allow the seating surfaces to move independently and adjust to movement of the body seats.

GLOBE VALVES-The valve is normally supplied with the plug type disc. The disc rotates freely on the stem and incorporates a differential angle from that on the seat ring. This design provides the maximum assurance of shut off, is less likely to stick in the body seat and is considered the simplest design for field repair. Bottom guided discs are available.

CHECK VALVES-Each disc's seating surface is precision ground and mated to the seat ring for insurance of a positive shut off. The disc is bolted to the hinge arm and pinned to prevent disengagement during service.

Other soft insert sare available upon request.

DBV CAST STEEL BOLTED BONNET GATE VALVE EXPANDED VIEW

1. Body: DBV cast steelbodies provide lowresistance flow and optimum strengthand performance.
2. Yoke & Bonnet:DBV bonnetassemblies are builtto the same standards asthe bodies. Largersize gate valvesutilize a multi-piece bonnet design.
3. Grease Fitting:The grease fittingallows for easystem lubrication.
4. Stem: Thestem is precisionmachined and insertsinto the horizontal channel inthe disc.
5. Wedge: DBV 1-piece flexwedge is machinedto the tightest tolerances toensure trouble freeshutoff and cycling.
6. Back SeatBushing: The backseat, when engagedwith the stem head,provides a stableshutoff to thestuffing box which isolates thepacking from flowexposure.
7. Gland: Compressesthe packing tocreate a stemseal above the back seat,between the bonnetand stem.
8. Gland Flange:Applies pressureto the glandfor accurate packing adjustments.
9 & 10.Gland Bolts &Nuts: The glandbolt and nutallows for easy adjustmentsfor packing compression.
11. GlandBolt Pin: Thegland bolt pinsecures the gland bolts to theyoke & bonnet.
12. Packing: Thepacking creates aseal above theback seat, between the bonnetand stem.
13. Stuffing Box:The stuffingbox contains thepacking.
14. Stem Nut:The stem nutprovides a precisionguide for proper stem alignment.
15. Yoke Bushing: Theretaining nut securesthe stem nut to the bonnetassembly.
16. Handwheel: Thehandwheel cycles thevalve.
17. Handwheel Nut:The handwheel nutsecures the handwheel to thebonnet assembly.
18. Set Screw:The set screwprevents handwheel nut loosening.
19. Bonnet Gasket:The bonnet gasketcreates a leakproof seal between thebonnet and body.
20 & 21.Bonnet Studs &Nuts: The bonnetstuds and nuts secure thebonnet to thebody.
22. Seat Rings:Toensure a stableshutoff, seat ringsare aligned and seal-weldedinto the valve,then precision groundfor optimal seating.
23. Spacer Ring:Assists thepacking rings increating a seal above the backseat, between thebonnet and stem.

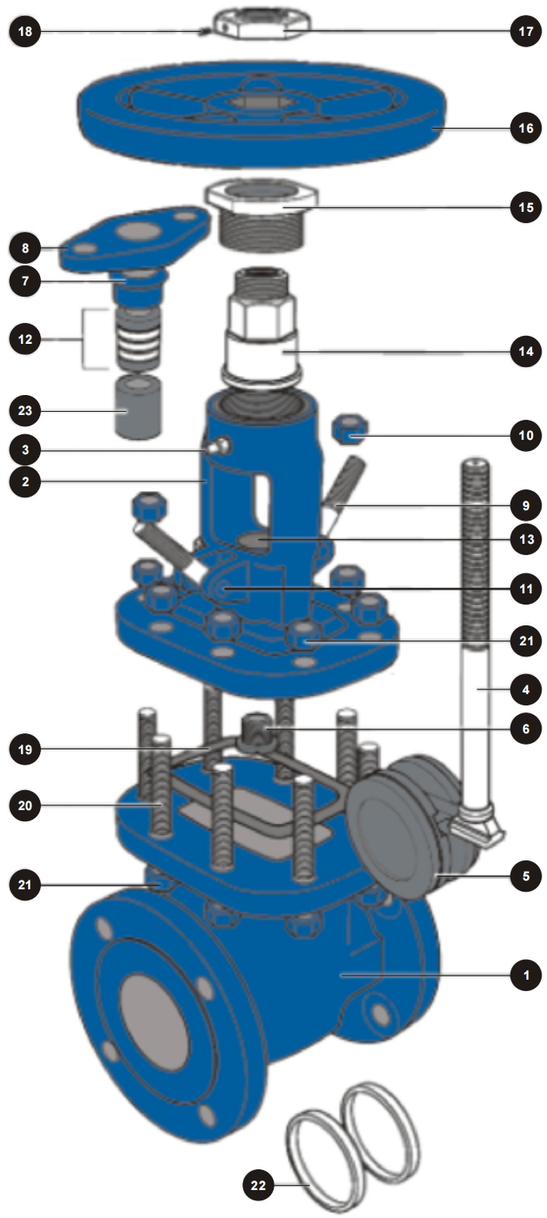

CAST STEEL GATE VALVES

STANDARD PARTS AND MATERIALS

NO.	PART NAME	CARBON STEEL		ALLOY STEEL				STAINLESS STEEL
		TYPE WCB	TYPE LCB	TYPE WC6	TYPE WC9	TYPE C5	TYPE C12	TYPE CF8M
1	BODY	A216-WCB	A352-LCB	A217-WC6	A217-WC9	A217-C5	A217-C12	A351-CF8M
2	BONNET	A216-WCB	A352-LCB	A217-WC6	A217-WC9	A217-C5	A217-C12	A351-CF8M
3	GATE	A217 CA15 or WCB+410	A351 CF8M or LCB+316	A217 CA15 or WCB+410	A217 CA15 or WC9+410	A217 CA15 or C5+410	A217 CA15 or C12+410	A351-CF8M
4	SEAT RING	A576-1020+STL	A182-316	A182 F11+STL	F22+STL	F5a+STL	F9+STL	A479-316
5	YOKE	A216 WCB	LCB/WCB	WC6/WCB	WC9/WCB	C5/WCB	C12/WCB	A351-CF8
6	HANDWHEEL	A197 or WCB	A197 or WCB	A197 or WCB	A197 or WCB	A197 or WCB	A197 or WCB	A197 or WCB
7	STEM	A479-410	A479-316	A479-410	A479-410	A479-410	A479-410	A479-316
8	BACKSEAT BUSHING	A479-410	A479-316	A479-410	A479-410	A479-410	A479-410	A479-316
9	GLAND FLANGE	A105	A105	A105	A105	A105	A105	A351-CF8
10	STEM NUT	A439-D2	A439-D2	A439-D2	A439-D2	A439-D2	A439-D2	A439-D2
11	GLAND PROPER	C/S 1020+Cr Plate	C/S 1020+Cr Plate	C/S 1020+Cr Plate	C/S 1020+Cr Plate	C/S 1020+Cr Plate	C/S 1020+Cr Plate	A479-316
12	YOKE CAP	C/S1020	C/S1020	C/S1020	C/S1020	C/S1020	C/S1020	A576-1020
13	BONNET BOLT	A193-B7	A320-L7	A193-B16	A193-B16	A193-B16	A193-B16	A193-B8
14	BONNET NUT	A194-2H	A194-4	A194-4	A194-4	A194-4	A194-4	A194-8
15	GLAND EYEBOLT	A307B	A307B	A193-B7	A193-B7	A193-B7	A193-B7	A193-B8
16	GLAND ADJUSTMENT NUT	A307B	A307B	A194-2H	A194-2H	A194-2H	A194-2H	A194-8
17	HANDWHEEL NUT	A47 Gr 32510	A47 Gr 32510	A47 Gr 32510	A47 Gr 32510	A47 Gr 32510	A47 Gr 32510	A47 Gr 32510
18	GLAND EYEBOLT PIN	C/S 1020	C/S 1020	C/S 1020	C/S 1020	C/S 1020	C/S 1020	A479-304
19	PACKING	Flex. Graphite	Flex. Graphite	Flex. Graphite	Flex. Graphite	Flex. Graphite	Flex. Graphite	Flex. Graphite
20	GASKET	Graphite + 304SS	Graphite + 304SS	Graphite + 304SS	Graphite + 304SS	Graphite + 304SS	Graphite + 304SS	Graphite + 316SS
21	YOKE BOLT	A193-B7	A193-B7	A193-B7	A193-B7	A193-B7	A193-B7	A193-B8
22	YOKE NUT	A194-2H	A194-2H	A194-2H	A194-2H	A194-2H	A194-2H	A194-8
23	NAMEPLATE	Stainless Steel	Stainless Steel	Stainless Steel	Stainless Steel	Stainless Steel	Stainless Steel	Stainless Steel

[1]Other materials available onrequest.
[2]STL = Stellite#6.

CAST STEEL GATE VALVE

- Cast steel gate valve, outsidescrew and yoke,
- Bolted bonnet, rising stem, non-risinghandwheel,
- Flexible wedge, available in weldedor threaded seat rings,
- Designed according to API-600.

Face to Face	ASME/ANSI B16.10
End Flange	ASME/ANSI B16.5*
Buttweld	ASME/ANSI B16.25
Rating	ASME/ANSI Class 150

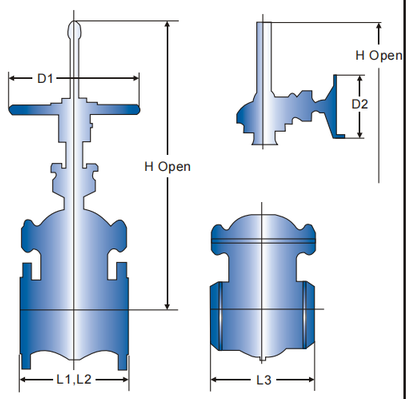

CLASS 150 DIMENSION

SIZE (in.)	1-1/2"	2"	2-1/2"	3"	4"	6"	8"	10"	12"
									Unit: inch
L1: RF	6.50	7.00	7.50	8.00	9.00	10.50	11.50	13.00	14.00
L2: RTJ	7.00	7.50	8.00	8.50	9.50	11.00	12.00	13.50	14.50
L3: BW	6.50	8.50	9.50	11.13	12.00	15.88	16.50	18.00	19.76
H	12.76	14.45	15.63	18.03	22.05	30.04	37.80	45.91	53.90
D1	7.09	7.87	7.87	8.82	9.84	12.40	13.98	15.75	17.72
D2	-	-	-	-	12.40	12.40	12.40	13.98	15.75
W.T F	36	41	58	73	106	192	284	397	618
(lbs) BW	31	36	47	61	86	166	242	327	513

SIZE (in.)	14"	16"	18"	20"	24"	30"	36"
							Unit: inch
L1:RF	15.00	16.00	17.00	18.00	20.00	24.00	28.00
L2:RTJ	15.50	16.50	17.50	18.50	20.50	-	-
L3:BW	22.50	24.00	26.00	28.00	32.00	36.00	40.00
H	59.65	71.80	74.80	83.50	98.50	126.00	140.20
D1	19.69	22.05	24.80	27.95	31.50	35.43	43.00
D2	15.75	15.75	17.72	17.72	19.69	27.95	31.50
W.T F	904	1,279	1,488	1,856	3,042	4,630	6,400
(lbs)	774	1,126	1,296	1,632	2,703	3,944	6,305

* 26"and larger are available with ASME/ANSI B16.47end flanges, either Style A orStyle B (formerly MSS SP-44 and API 605).

CAST STEEL GATE VALVE

- Cast steel gate valve, outside screw and yoke,
- Bolted bonnet, rising stem, non-rising handwheel,
- Flexible wedge, available in welded or threaded seat rings,
- Designed according to API-600.

Face to Face	ASME/ANSI B16.10
End Flange	ASME/ANSI B16.5*
Buttweld	ASME/ANSI B16.25
Rating	ASME/ANSI Class 300

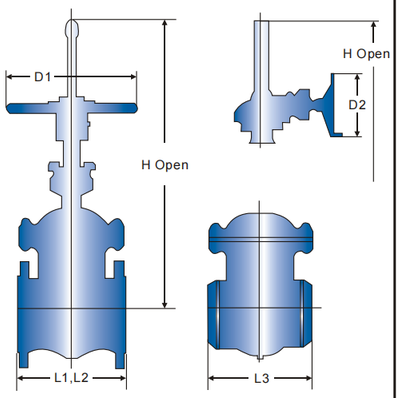

CLASS 300 DIMENSION

Unit: inch

SIZE (in.)	1-1/2"	2"	2-1/2"	3"	4"	6"	8"	10"	12"
L1: RF	7.50	8.50	9.50	11.13	12.00	15.83	16.50	18.00	19.75
L2: RTJ	8.00	8.13	10.13	11.83	12.63	16.50	17.13	18.63	20.38
L3: BW	7.50	8.50	9.50	11.13	12.00	15.83	16.50	18.00	19.75
H	15.00	15.94	17.32	19.69	23.31	32.13	41.02	48.31	56.77
D1	7.87	7.87	7.87	8.82	9.84	13.98	15.75	17.72	19.69
D2	-	-	-	-	12.40	12.40	12.40	13.98	15.75
W.T F	40	58	75	110	165	317	550	704	1,056
(lbs)	29	49	60	84	119	251	462	561	808

Unit: inch

SIZE (in.)	14"	16"	18"	20"	24"	30"	36"
L1: RF	30.00	33.00	36.00	39.00	45.00	55.00	68.00
L2: RTJ	30.63	33.63	36.63	39.75	45.83	56.00	59.00
L3: BW	30.00	33.00	36.00	39.00	45.00	55.00	68.00
H	62.52	74.41	80.31	86.50	121.18	127.60	159.06
D1	22.05	24.80	27.95	31.50	35.43	51.02	63.00
D2	15.75	19.69	19.69	19.69	24.80	31.50	51.02
W.T F	1,496	2,139	2,772	3,545	5.346	8,316	16.698
(lbs)	1,232	1,793	2,354	3,058	4.367	7,040	14.960

* 26"and larger are available with ASME/ANSI B16.47end flanges, either Style A or Style B (formerly MSS SP-44 and API 605).

CAST STEEL GATE VALVE

- Cast steel gate valve, outside screw and yoke,
- Bolted bonnet, rising stem, non-rising handwheel,
- Flexible wedge, available in welded or threaded seat rings,
- Designed according to API-600.

Face to Face	ASME/ANSI B16.10
End Flange	ASME/ANSI B16.5*
Buttweld	ASME/ANSI B16.25
Rating	ASME/ANSI Class 600

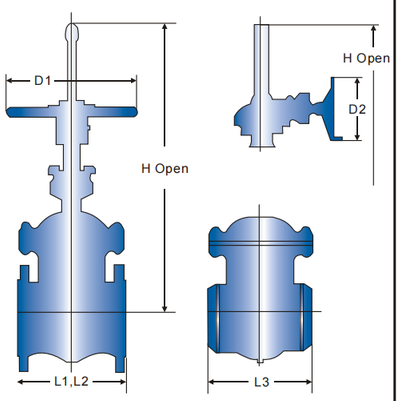

CLASS 600 DIMENSION

Unit: inch

SIZE (in.)	2"	2-1/2"	3"	4"	6"	8"	10"	12"
L1: RF	11.50	13.00	14.00	17.00	22.00	26.00	31.00	33.00
L2: RTJ	11.63	13.13	14.13	17.13	22.13	26.13	31.13	33.13
L3: BW	11.50	13.00	14.00	17.00	22.00	26.00	31.00	33.00
H	16.65	17.99	20.12	25.00	37.72	42.44	48.86	56.69
D1	7.87	8.82	9.84	13.98	17.72	19.69	24.80	27.95
D2	-	-	-	12.40	15.75	17.72	19.69	22.05
W.T F	80	113	143	277	532	935	1,385	1,984
(lbs)	69	97	122	220	423	744	1,102	1,578

Unit: inch

SIZE (in.)	14"	16"	18"	20"	24"	30"
L1: RF	35.00	39.00	43.00	47.00	55.00	65.00
L2: RTJ	35.13	39.13	43.13	47.25	55.38	65.50
L3: BW	35.00	39.00	43.00	47.00	55.00	65.00
H	50.09	71.06	78.11	79.92	107.00	155.98
D1	31.50	35.43	35.43	42.99	42.99	63.00
D2	24.80	27.96	27.96	31.50	31.50	35.43
W.T F	2,658	3,108	4.891	6,197	8,656	14,840
(lbs)	2,283	2,473	4.240	5,371	7,473	12,810

* 26"and larger are available with ASME/ANSI B16.47end flanges, either Style A or Style B (formerly MSS SP-44 and API 605).

CAST STEEL GATE VALVE

- Cast steel gate valve, outside screw and yoke,
- Bolted bonnet, rising stem, non-rising handwheel,
- Flexible wedge, available in welded or threaded seat rings,
- Designed according to API-600.

Face to Face	ASME/ANSI B16.10
End Flange	ASME/ANSI B16.5
Buttweld	ASME/ANSI B16.25
Rating	ASME/ANSI Class 900

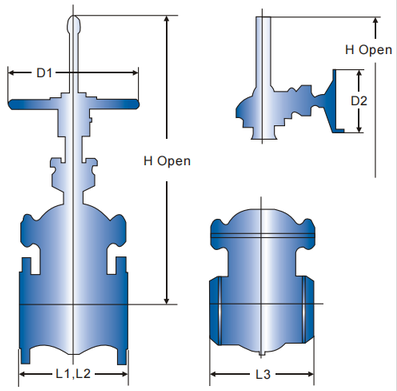

CLASS 900 DIMENSION

Unit: inch

SIZE (in.)	2"	3"	4"	6"	8"	10"	12"
L1: RF	14.50	15.00	18.00	24.00	29.00	33.00	38.00
L2: RTJ	14.63	15.13	18.13	24.13	29.13	33.13	38.13
L3: BW	14.50	15.00	18.00	24.00	29.00	33.00	38.00
H	18.66	23.03	27.64	37.72	50.98	57.13	65.16
D1	9.84	13.98	13.98	19.69	24.80	24.80	31.50
D2	-	-	-	17.72	22.05	24.80	24.80
W.T F	178	219	307	750	1,279	1,963	3,160
(lbs)	165	191	251	641	1,113	1,552	2,670

Unit: inch

SIZE (in.)	14"	16"	18"	20"	24"
L1: RF	40.50	44.50	48.00	52.00	61.00
L2: RTJ	40.87	44.87	48.50	52.50	61.75
L3: BW	40.50	44.50	48.00	52.00	61.00
H	72.52	84.61	87.80	97.10	111.81
D1	35.43	35.43	42.99	42.99	42.99
D2	27.95	27.95	31.50	35.43	35.43
W.T F	4,395	5,940	7.662	9,620	14,454
(lbs)	3,740	5,078	6.534	8,010	12,117

CAST STEEL GATE VALVE

- Cast steel gate valve, outside screw and yoke,
- Bolted bonnet, rising stem, non-rising handwheel,
- Flexible wedge, available in welded or threaded seat rings,
- Designed according to API-600.

Face to Face	ASME/ANSI B16.10
End Flange	ASME/ANSI B16.5
Buttweld	ASME/ANSI B16.25
Rating	ASME/ANSI Class1500

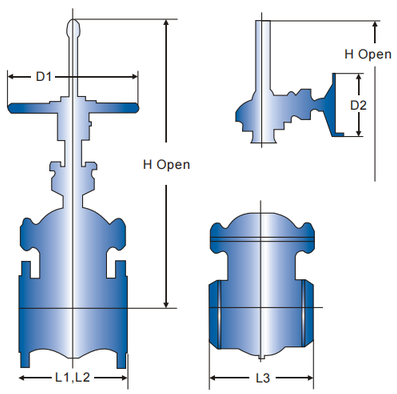

CLASS 1500 DIMENSION

Unit: inch

SIZE (in.)	2"	3"	4"	6"	8"	10"	12"
L1: RF	14.50	15.00	18.00	24.00	29.00	33.00	44.50
L2: RTJ	14.63	18.63	21.63	28.00	33.13	39.37	45.13
L3: BW	14.50	15.00	18.00	24.00	32.75	33.00	44.50
H	18.66	23.74	28.70	37.17	53.50	57.13	67.13
D1	9.84	13.98	13.98	19.69	24.80	24.80	35.43
D2	-	-	17.72	17.72	27.95	27.95	27.95
W.T F	178	312	529	1,114	2,351	3,840	6,464
(lbs)	165	246	423	896	2,058	3,050	5,270

Unit: inch

SIZE (in.)	14"	16"	18"	20"	24"
L1: RF	49.50	54.50	60.50	65.50	76.50
L2: RTJ	50.25	55.37	61.37	66.37	77.63
L3: BW	49.50	54.50	60.50	65.50	76.50
H	74.49	90.12	93.31	104.96	119.69
D1	35.43	35.43	35.43	35.43	-
D2	31.50	35.43	35.43	42.99	42.99
W.T F	8,150	13,300	17,820	22,037	32,210
(lbs)	6,340	11,800	15,325	18,920	27,264

PARALLEL SLIDING GATE VALVE

- Cast Steel Gate Valve, Outside Screw and York,
- Bolted Bonnet, Rising Stem, Flexible Wedge
- Parallel Double Disc, Double Expanding Sealed
- Designed to ASME B16.34

Face to Face	ASME/ANSI B16.10
End Flange	ASME/ANSI B16.5
Buttweld	ASME/ANSI B16.25
Class	ASME/ANSI CL150

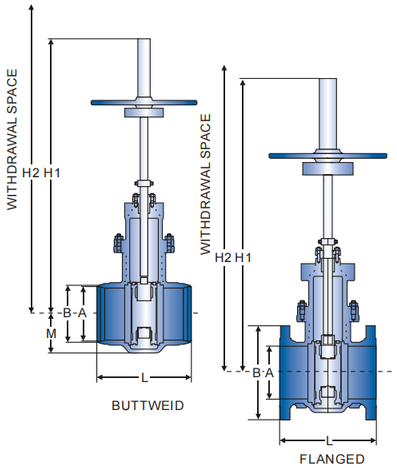

CLASS 150 FLANGED

SIZE (in.)	A	B	H1	H2	L	W.T (lbs) Unit: inch
2-1/2	2-1/2	7	14-3/8	20-1/8	7-1/2	73
3	3	7-1/2	21-1/8	26-3/4	8	88
4	4	9	27	32-7/8	9	154
6	6	11	39-3/8	45-7/8	10-1/2	284
8	8	131/2	44-1/2	51-1/4	11-1/2	430
10	10	16	52-3/8	61-1/2	13	606
12	12	19	60-3/8	71-3/4	14	816
14	13.18	21	61-1/4	76	15	1120
16	15.16	231/2	66-5/8	79	16	1444
18	17.32	25	77-7/8	91-1/2	17	1852
20	19.10	271/2	85-3/8	99	18	2304
24	23.23	32	107	123	20	4400

CLASS 150 BUTTWELD

SIZE (in.)	A	B	H1	H2	L	M	W.T (lbs) Unit: inch
2-1/2	2.36	3.54	14-3/8	20-1/8	9-1/2	2-3/4	71
3	2.91	3.50	21-1/8	26-3/4	11-1/8	3	79
4	3.81	5.12	27	32-7/8	12	3-5/8	139
6	5.87	7.28	38-5/8	45-7/8	15-5/8	5	306
8	7.60	9.44	44-1/2	51-1/4	16-1/2	6-3/8	370
10	9.60	11.42	52-3/8	61-1/2	18	7-1/2	551
12	11.61	13.58	60-3/8	71-3/4	19-3/4	8-3/4	701
14	12.99	15.35	61-1/4	76	22-1/2	9-3/4	1180
16	14.96	17.50	2000	79	24	10-3/4	1389
18	16.73	19.00	2315	91-1/2	26	11-7/8	2099
20	18.90	21.00	85-3/8	99	28	14-1/4	2503
24	22.64	25.60	107	123	31	15-3/8	3300

Withdrawal space shown refers to the valve being in the fully open position.

PARALLEL SLIDING GATE VALVE

- Cast Steel Gate Valve, Outside Screw and York,
- Bolted Bonnet, Rising Stem, Flexible Wedge
- Parallel Double Disc, Double Expanding Sealed
- Designed to ASME B16.34

Face to Face	ASME/ANSI B16.10
End Flange	ASME/ANSI B16.5
Buttweld	ASME/ANSI B16.25
Class	ASME/ANSI CL300

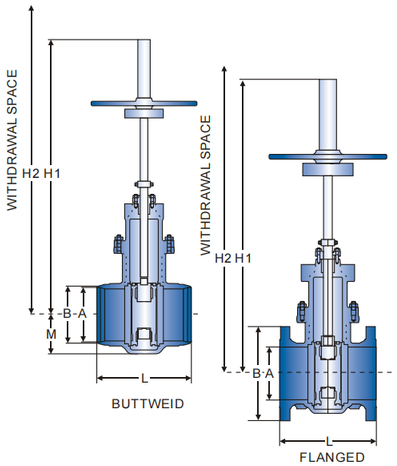

CLASS 300 FLANGED

SIZE (in.)	A	B	H1	H2	L	W.T (lbs) Unit: inch
2-1/2	21/2	71/2	187/8	201/8	91/2	86
3	3	81/4	211/8	263/4	111/8	101
4	4	10	27	327/8	12	183
6	6	121/2	393/8	457/8	157/8	375
8	8	15	45	511/4	161/2	540
10	10	171/2	571/4	611/2	18	906
12	12	201/2	63	713/4	193/4	1345
14	13.18	23	671/4	76	221/2	1726
16	15.16	251/2	745/8	79	24	2223
18	16.93	28	817/8	911/2	26	3091
20	19.10	301/2	101	99	28	3407
24	23.03	36	120	123	31	4700

CLASS 300 BUTTWELD

SIZE (in.)	A	B	H1	H2	L	M	W.T (lbs) Unit: inch
2-1/2	2.36	3.54	18-7/8	20-1/8	9-1/2	2-7/8	71
3	2.91	3.94	21-1/8	26-7/8	11-1/8	3	79
4	3.80	5.12	27	32-7/8	12	3-5/8	139
6	5.80	7.28	38-5/8	45-7/8	15-5/8	5	306
8	7.60	9.44	45	47-3/4	16-1/2	6-3/8	463
10	9.64	11.81	57-1/4	66-5/8	18	7-1/2	875
12	11.61	13.58	59	72-7/8	19-3/4	8-3/4	1147
14	12.48	15.47	67-1/4	78	22-1/2	10-1/8	1347
16	14.96	17.51	79	80	24	10-7/8	1715
18	16.73	19.50	95	96	26	12-1/4	2485
20	18.19	21.65	101	117-1/2	28	14-3/8	2712
24	22.64	25.60	112	132-1/2	31	16-3/8	3300

Withdrawal space shown refers to the valve being in the fully open position.

TYPICAL DBV CAST STEEL BOLTED BONNET GLOBE VALVE EXPANDED VIEW

1. Body: DBV cast steel bodies provide low resistance flow and optimum strength and performance.
2. Bonnet: DBV bonnet assemblies are built to the same standards as the bodies.
3. Back Seat Bushing: The backseat, when engaged with the stem head, provides a stable shutoff to the stuffing box which isolates the packing from flow exposure.
4. Stem: The stem inserts vertically into the disc.
5. Lock Groove: The lock groove receives the split lock ring which allows the disc nut to lift the disc during cycling.
6. Split Ring: The split ring allows the disc nut to lift the disc during cycling.
7. Disc: DBV plug type disc is machined to the tightest tolerances to ensure trouble free shutoff and cycling.
8. Disc Nut: The disc nut in conjunction with the split lock ring, secures the disc to the stem.
9. Gland: Compresses the packing to create a stem seal above the back seat, between the bonnet and stem.
10. Gland Flange: Applies pressure to the gland for accurate packing compression.

11 & 12. Gland Bolts & Nuts: The gland bolt and nut allows for easy adjustments for packing compression.

13. Gland Bolt Pin: The gland bolt pin secures the gland bolts to the yoke & bonnet.
14. Packing: The packing creates a seal above the back seat, between the bonnet and stem.
15. Stuffing Box: The stuffing box contains the packing.
16. Stem Nut: The stem nut provides a precision guide for proper stem alignment.
17. Handwheel: The handwheel cycles the valve.
18. Handwheel Nut: The handwheel nut secures the handwheel to the bonnet assembly.
19. Handwheel Washer: The washer helps to prevent loosening or distributes pressure evenly.
20. Bonnet Gasket: The bonnet gasket creates a leakproof seal between the bonnet and body.

21 & 22. Bonnet Studs & Nuts: The bonnet studs and nuts secure the bonnet to the body.

23. Seat Ring: To ensure a stable shutoff, the seat rings is aligned and seal-welded into the valve, then precision ground for optimal seating.
24. Disc Guide: The disc guides provide a stable track for keeping the disc aligned with the seat during cycling.
25. Spacer Ring: Assists the packing rings increating a seal above the backseat, between the bonnet and stem.

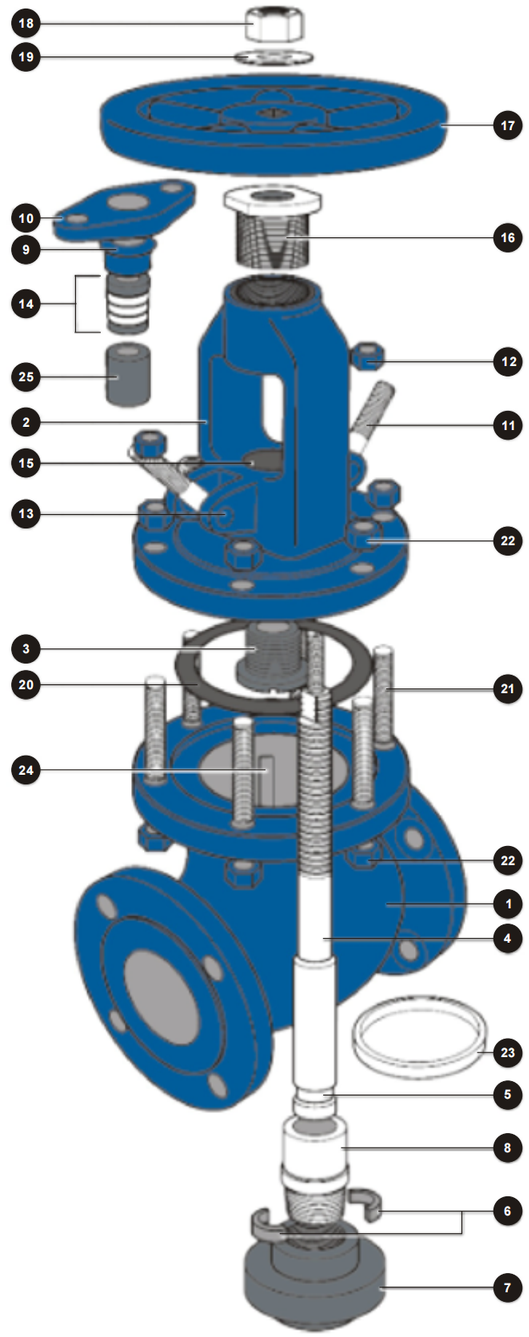

TYPICAL DBV CAST STEEL BOLTED BONNET ANGLE VALVE EXPANDED VIEW

1. Body: DBV cast steel bodies provide low resistance flow and optimum strength and performance.
2. Bonnet: DBV bonnet assemblies are built to the same standards as the bodies.
3. Back Seat Bushing: The backseat, when engaged with the stem head, provides a stable shutoff to the stuffing box which isolates the packing from flow exposure.
4. Stem: The stem inserts vertically into the disc.
5. Lock Groove: The lock groove receives the split lock ring which allows the disc nut to lift the disc during cycling.
6. Split Ring: The split ring allows the disc nut to lift the disc during cycling.
7. Disc: DBV disc is machined to the tightest tolerances to ensure troublefree shutoff and cycling.
8. Disc Nut: The disc nut in conjunction with the split lock ring, secures the disc to the stem.
9. Gland: Compresses the packing to create a stem seal above the back seat, between the bonnet and stem.
10. Gland Flange: Applies pressure to the gland for accurate packing compression.
11 &12. Gland Bolts & Nuts: The gland bolt and nut allows for easy adjustments for packing compression.
13. Gland Bolt Pin: The gland bolt pin secures the gland bolts to the yoke & bonnet.
14. Packing: The packing creates a seal above the back seat, between the bonnet and stem.
15. Stuffing Box: The stuffing box contains the packing.
16. Stem Nut: The stem nut provides a precision guide for proper stem alignment.
17. Handwheel: The handwheel cycles the valve.
18. Handwheel Nut: The handwheel nut secures the handwheel to the bonnet assembly.
19. Handwheel Washer: The washer helps to prevent loosening or distributes pressure evenly.
20. Bonnet Gasket: The bonnet gasket creates a leakproof seal between the bonnet and body.
21 & 22. Bonnet Studs & Nuts: The bonnet studs and nuts secure the bonnet to the body.
23. Seat Ring: To ensure a stable shutoff, the seat rings is aligned and seal-welded into the valve, then precision ground for optimal seating.
24. Disc Guide: The disc guides provide a stable track for keeping the disc aligned with the seat during cycling.
25. Spacer Ring: Assists the packing rings in creating a seal above the backseat, between the bonnet and stem.

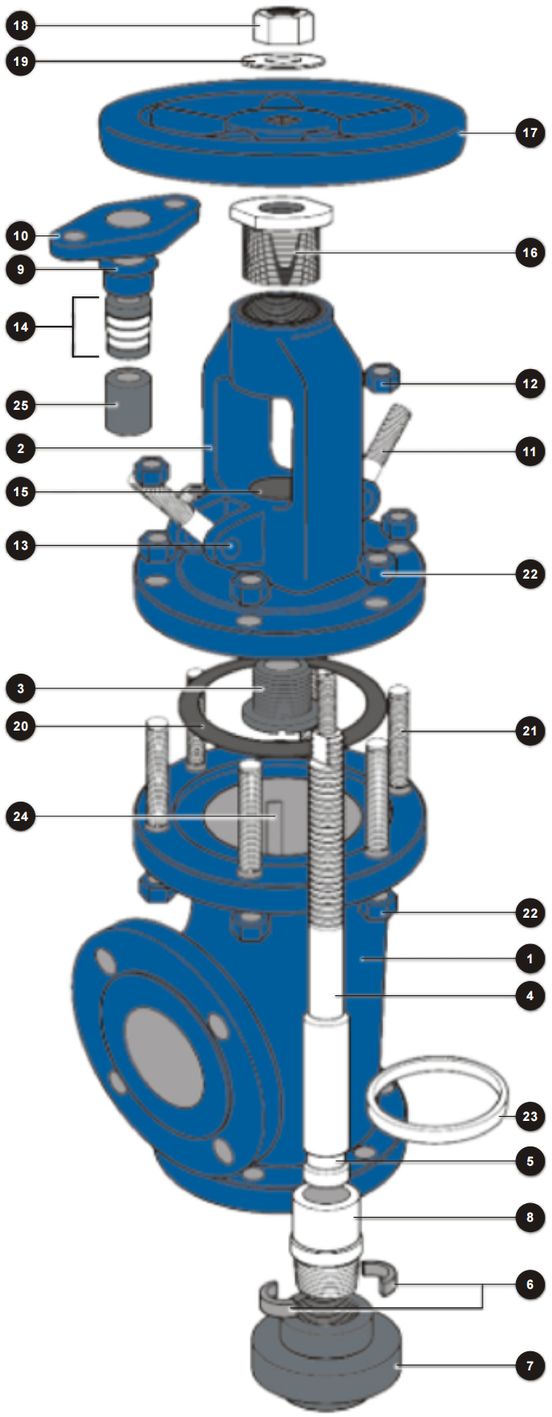

CAST STEEL GLOBE AND ANGLE VALVES

STANDARD PARTS AND MATERIALS

NO.	PART NAME	CARBON STEEL		ALLOY STEEL				STAINLESS STEEL
		TYPE WCB	TYPE LCB	TYPE WC6	TYPE WC9	TYPE C5	TYPE C12	TYPE CF8M
1	BODY	A216-WCB	A352-LCB	A217-WC6	A217-WC9	A217-C5	A217-C12	A351-CF8M
2	BONNET	A216-WCB	A352-LCB	A216-WC6	A217-WC9	A217-C5	A217-C12	A351-CF8M
3	DISC1	A217 CA15 or WCB+410	A351 CF8M or LCB+316	A217 CA15 or WCB+410	A217 CA15 or WC9+410	A217 CA15 or C5+410	A217 CA15 or C12+410	A351-CF8M
4	STEM	A479-410	A479-316	A479-410	A479-410	A479-410	A479-410	A479-316
5	HANDWHEEL	A216-WCB or A197	A216-WCB or A197	A216-WCB or A197	A216-WCB or A197	A216-WCB or A197	A216-WCB or A197	A216-WCB or A197
6	SEAT RING	C/S 1020+410	A182-F304	A182 F11+STL	A182 F5a+STL	A182 F9+STL	A182 F9+STL	A479-316
7	BACKSEAT BUSHING	A479-410	A479-304	A479-410	A479-410	A479-410	A479-410	A479-316
8	GLAND PROPER	C/S 1020 + Cr Plate	A479-410	A479-410	A479-410	A479-410	A479-410	A479-316
9	GLAND FLANGE	A105 or A283-D	A105 or A283-D	A105 or A283-D	A105 or A283-D	A105 or A283-D	A105 or	A351-CF8
10	STEM NUT	A439-D2	A439-D2	A439-D2	A439-D2	A439-D2	A439-D2	A439-D2
11	BONNET BOLT	A193-B7	A320-L7	A193-B16	A193-B16	A193-B16	A193-B16	A193-B8
12	BONNET NUT	A194-2H	A194-4	A194-4	A194-4	A194-4	A194-4	A194-8
13	GLAND EYEBOLT	A307B	A307B	193-B7	193-B7	193-B7	193-B7	A193-B8
14	GLAND ADJUSTMENT NUT	A307B	A307B	A194-2H	A194-2H	A194-2H	A194-2H	A194-8
15	GLAND EYEBOLT PIN	C/S 1020	C/S 1020	C/S 1020	C/S 1020	C/S 1020	C/S 1020	A479-304
16	DISC NUT	A479-410	A479-304	A479-410	A479-410	A479-410	A479-410	A479-316
17	HANDWHEEL NUT	A307B	A307B	BA307	A307B	A307B	A307B	A194-8
18	PACKING	Flex. Graphite	Flex. Graphite	Flex. Graphite	Flex. Graphite	Flex. Graphite	Flex. Graphite	Flex. Graphite
19	GASKET	Graphite + 304SS	Graphite + 304SS	Graphite + 304SS	Graphite + 304SS	Graphite + 304SS	Graphite + 304SS	Graphite + 316SS
20	NAMEPLATE	Stainless Steel	Stainless Steel	Stainless Steel	Stainless Steel	Stainless Steel	Stainless Steel	Stainless Steel

1. Other materials available on request.
2. STL = Stellite #6.

CAST STEEL GLOBE AND ANGLE VALVE

- Cast steel globe valve, outside screw and yoke
- Bolted bonnet, rising stem, swivel plug disc
- Available in welded and threaded seatrings
- Designed according to API-600

Face to Face	ASME/ANSI B16.10
End Flange	ASME/ANSI B16.5
Buttweld	ASME/ANSI B16.25
Rating	ASME/ANSI Class 150

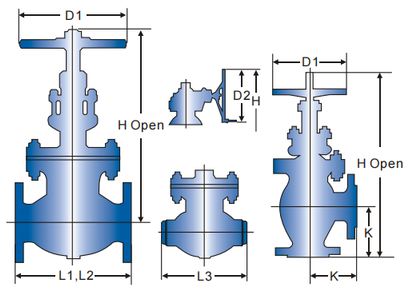

CLASS 150 DIMENSION

SIZE (in.)	1-1/2"	2"	2-1/2"	3"	4"	6"	8"
							Unit: inch
L1: RF	6.50	8.00	8.50	9.50	11.50	16.00	19.50
L2: RTJ	7.00	8.50	9.00	10.00	12.00	16.50	20.00
L3: BW	6.50	8.00	8.50	9.50	11.50	16.00	19.50
K: RF/BW	3.25	4.00	4.25	4.75	5.75	8.00	9.75
H	11.42	12.44	12.99	14.37	16.30	19.87	24.53
D1	7.09	2.87	2.87	8.82	11.02	13.98	15.75
D2	-	-	-	-	-	13.98	17.72
W.T RF	38	46	62	75	114	209	371
(lbs) BW	33	36	53	60	90	163	316

SIZE (in.)	10"	12"	14"	16"	18"	20"
						Unit: inch
L1: RF	24.50	27.50	31.00	36.00	38.50	38.50
L2: RTJ	25.00	28.00	31.50	36.50	39.00	39.00
L3: BW	24.50	27.50	31.00	36.00	38.50	38.50
K: RF/BW	12.25	13.75	15.50	18.00	-	-
H	31.61	33.03	52.99	60.98	70.00	78.98
D1	17.72	19.69	22.05	24.80	31.50	31.50
D2	17.72	19.69	22.05	24.80	27.95	31.50
W.T RF	534	891	1,365	1,808	2,156	2,822
(lbs) BW	426	786	1,234	1,655	1,964	2,597

CAST STEEL GLOBE AND ANGLE VALVE

- Cast steel globe valve, outside screw and yoke
- Bolted bonnet, rising stem, swivel plug disc
- Available in welded and threaded seatrings
- Designed according to API-600

Face to Face	ASME/ANSI B16.10
End Flange	ASME/ANSI B16.5
Buttweld	ASME/ANSI B16.25
Rating	ASME/ANSI Class 300/600

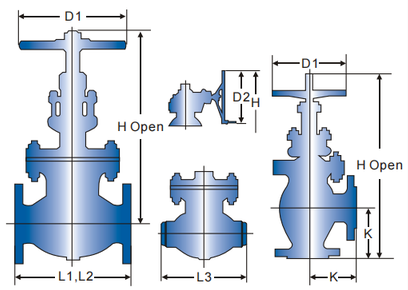

CLASS 300 DIMENSION

SIZE (in.)	2"	2-1/2"	3"	4"	6"	8"	10"	12"	14"	16"
										Unit: inch
L1: R F	10.50	11.50	12.50	14.00	17.50	22.00	24.50	28.00	33.00	34.00
L2: RTJ	11.13	12.13	13.13	14.63	18.13	22.63	25.13	28.63	33.63	34.63
L3: BW	10.50	11.50	12.50	14.00	17.50	22.00	24.50	28.00	33.00	34.00
K: RF/BW	5.25	5.75	6.25	7.00	8.75	11.00	12.25	14.00	-	-
H	13.78	15.39	16.54	19.37	24.41	31.22	45.08	49.61	55.28	62.99
D1	7.87	8.82	11.02	13.98	17.72	22.05	22.05	24.80	27.95	27.95
D2	-	-	-	-	17.72	19.69	22.05	24.80	24.80	27.96
W.T R F	58	88	116	176	370	546	1,005	1,340	2,008	2,650
(lbs) BW	53	80	94	142	299	440	860	1,143	1,720	2,260

CLASS 600 DIMENSION

SIZE (in.)	2"	2-1/2"	3"	4"	6"	8"	10"	12"
								Unit: inch
L1: R F	11.50	13.00	14.00	17.00	22.00	26.00	31.00	33.00
L2: RTJ	11.63	13.13	14.13	17.13	22.13	26.13	31.13	33.13
L3: BW	11.50	13.00	14.00	17.00	22.00	26.00	31.00	33.00
K: RF/BW	5.25	5.75	6.25	8.00	9.75	11.75	13.25	15.00
H	15.43	17.00	18.82	20.87	26.57	28.39	38.27	42.28
D1	8.82	11.02	12.40	13.98	19.69	22.05	24.80	27.95
D2	-	-	-	13.98	19.69	22.05	22.05	24.80
W.T R F	82	89	137	253	525	800	1,505	1,984
(lbs) BW	68	70	109	198	415	637	1,235	1,671

CAST STEEL GLOBE AND ANGLE VALVE

- Cast steel globe valve, outside screw and yoke
- Bolted bonnet, rising stem, swivel plug disc
- Available in welded and threaded seatrings
- Designed according to API-600

Face to Face	ASME/ANSI B16.10
End Flange	ASME/ANSI B16.5
Buttweld	ASME/ANSI B16.25
Rating	ASME/ANSI Class 900/1500

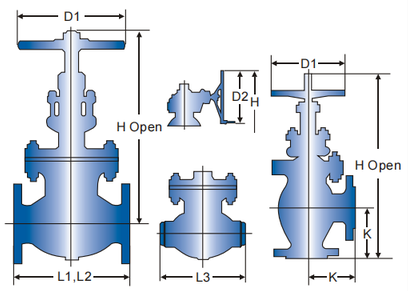

CLASS 900 DIMENSION

SIZE (in.)	2"	3"	4"	6"	8"	10"	12"
							Unit: inch
L1: R F	14.50	15.00	18.00	24.00	29.00	33.00	38.00
L2: RTJ	14.63	15.13	18.13	24.13	29.13	33.13	38.13
L3: BW	14.50	15.00	18.00	24.00	29.00	33.00	38.00
K: RF/BW	7.25	7.50	9.00	12.00	-	-	-
H	19.57	20.20	23.74	28.70	38.10	55.40	61.00
D1	12.40	13.98	15.75	22.05	24.80	27.95	31.50
D2	-	-	15.75	19.69	22.05	24.80	27.95
W.T R F	215	225	390	920	2,673	4,050	5,247
(lbs) BW	160	180	330	650	2,370	3,700	4,752

CLASS 1500 DIMENSION

SIZE (in.)	2"	3"	4"	6"	8"	10"	12"
							Unit: inch
L1: R F	14.50	18.50	21.50	27.75	32.75	39.00	44.50
L2: RTJ	14.62	18.62	21.62	28.00	33.12	39.38	45.13
L3: BW	14.50	18.50	21.50	27.75	32.75	39.00	44.50
K: RF/BW	7.25	8.25	9.25	10.75	13.88	-	-
H	19.57	23.00	28.10	36.00	46.90	58.00	65.00
D1	12.40	15.75	15.75	20.00	24.80	28.00	31.50
D2	-	13.98	15.75	24.80	27.96	31.50	31.50
W.T R F	215	462	772	1,810	4,170	6,330	8,712
(lbs) BW	160	265	425	1,500	3,540	5,544	7,524

TYPICAL DBV CAST STEEL BOLTED COVER SWING CHECK VALVE EXPANDED VIEW

1. Body: DBV cast steel bodies provide low resistance flow and optimum strength and performance.
2. Cover: The cover allows access to internal components.
3. Cover Gasket: The cover gasket creates a leakproof seal between the bonnet and body.
4. Seat Ring: To ensure a stable shutoff, the seat ring is aligned and seal-welded into the valve, then precision ground for optimal seating.
5. Disc: The disc allows uni-directional flow and restricts back flow with trouble free shutoff.
6. Swing Arm: The swing arm allows the disc to open and close. 7 & 8. Disc Nut & Pin: The disc nut and pin secures the disc to the swing arm.
9. Hinge Pin: The hinge pin provides a stable mechanism for the swing arm to operate.
10. Plug: The plug secures the arm pin inside the valve.
11. Plug Gasket: The plug gasket creates a leak-proof seal between the plug and body.
12 & 13. Cover Studs & Nuts: The cover studs and nuts secure the bonnet to the body.
14. Eyebolt: The eyebolt is used to aid in lifting the valve.

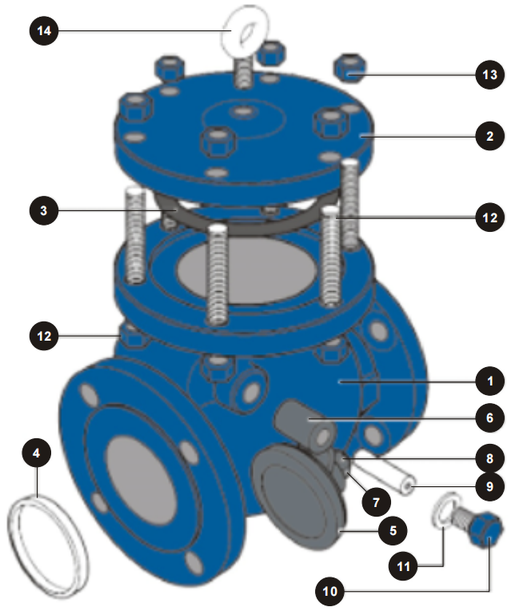

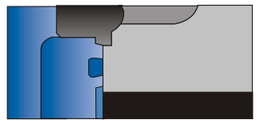

Standard Integral Seat
Design seals with a Clapper O-ring.

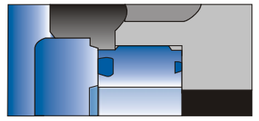

Interchangeable Seat Design
extends the service life of the valve.

CAST STEEL SWING CHECK VALVES
STANDARD PARTS AND MATERIALS

NO.	PART NAME	CARBON STEEL		ALLOY STEEL				STAINLESS STEEL
		TYPE WCB	TYPE LCB	TYPE WC6	TYPE WC9	TYPE C5	TYPE C12	TYPE CF8M
1	BODY	A216-WCB	A352-LCB	A217-WC6	A217-WC9	A217-C5	A217-C12	A351-CF8M
2	COVER	A216-WCB	A352-LCB	A217-WC6	A217-WC9	A217-C5	A217-C12	A351-CF8M
3	DISC	A217 CA15 or WCB+410	A351 CF8M or LCB+316	A217 CA15 or WC9+410	A217 CA15 or WC9+410	A217 CA15 or C5+410	A217 CA15 or C12+410	A351-CF8M
4	SEAT RING	A105	A182-F316	A182F11+STL	F22+STL	F5a+STL	F9+STL	A479-316
5	HINGE ARM	A216-WCB	A352-LCB	A217-WC6	A217-WC9	A217-C5	A217-C12	A351-CF8M
6	DISC NUT	A194 Gr8	A194 Gr8	A194 Gr8	A194 Gr8	A194 Gr8	A194 Gr8	A194-8
7	WASHER	A240-304	A240-316	A240-304	A240-304	A240-304	A240-304	A240-316
8	SPLIT PIN	A580-304	A580-316	A580-304	A580-304	A580-304	A580-304	A580-316
9	COVER BOLT	A193-B7	A320-L7	A193-B16	A193-B16	A193-B16	A193-B16	A193-B8
10	COVER NUT	A194-SH	A194-4	A194-4	A194-4	A194-4	A194-4	A194-8
11	HINGE PIN	A479-410	A479-410	A479-410	A479-410	A479-410	A479-410	A479-316
12	FLANGED PLUG	A479-410	A479-304	A479-304	A479-304	A479-304	A479-304	A479-316
13	GASKET	Graphite + 304SS	Graphite + 304SS	Graphite + 304SS	Graphite + 304SS	Graphite + 304SS	Graphite + 304SS	Graphite + 304SS
14	PLUG GASKET	Soft Steel	Soft Steel	Soft Steel	Soft Steel	Soft Steel	Soft Steel	Stainless Steel
15	NAMEPLATE	Stainless Steel	Stainless Steel	Stainless Steel	Stainless Steel	Stainless Steel	Stainless Steel	Stainless Steel

1. Other materials available on request.
2. STL = Stellite #6.

CAST STEEL SWING CHECK VALVE

- Cast steel swing checkvalve
- Horizontal or vertical lines, bolted cover
- Available inwelded or threadedseat rings
- Designed according to API-600

Face to Face	ASME/ANSI B16.10
End Flange	ASME/ANSI B16.5*
Buttweld	ASME/ANSI B16.25
Rating	ASME/ANSI Class 150

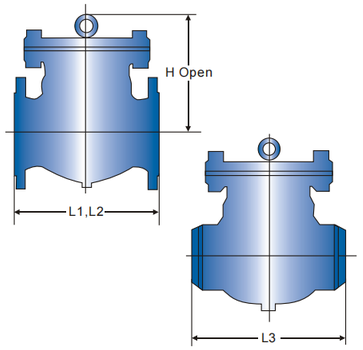

CLASS 150 DIMENSION

Unit: inch

SIZE (in.)	1-1/2"	2"	2-1/2"	3"	4"	6"	8"	10"
L1: RF	6.50	8.00	8.50	9.50	11.50	14.00	19.50	24.50
L2: RTJ	7.00	8.50	9.00	10.00	12.00	14.50	20.00	25.00
L3: BW	6.50	8.00	8.50	9.50	11.50	14.00	19.50	24.50
H	5.11	6.30	6.70	7.49	8.87	10.18	12.60	13.72
W.T RF	33	38	48	68	110	203	299	430
(lbs) BW	28	31	38	56	95	183	266	284

Unit: inch

SIZE (in.)	12"	14"	16"	18"	20"	24"	30"	36"
L1: RF	27.50	31.00	34.00	38.50	38.50	51.00	60.00	77.00
L2: RTJ	28.00	31.50	34.50	39.00	39.00	51.50	60.50	77.50
L3: BW	27.50	31.00	34.00	38.50	38.50	51.00	60.00	77.00
H	14.96	15.79	18.11	19.88	22.20	26.89	36.00	41.50
W.T RF	628	926	1,102	1,411	1,720	3,285	5,077	8,160
(lbs) BW	572	804	980	1,160	1,495	2,945	4,315	7,010

* 26"and larger are available with ASME/ANSI B16.47 end flanges, either Style A or Style B(formerly MSS SP-44 and API 605).

CAST STEEL SWING CHECK VALVE

- Cast steel swing checkvalve
- Horizontal or vertical lines, bolted cover
- Available inwelded or threadedseat rings
- Designed according to API-600

Face to Face	ASME/ANSI B16.10
End Flange	ASME/ANSI B16.5*
Buttweld	ASME/ANSI B16.25
Rating	ASME/ANSI Class 300

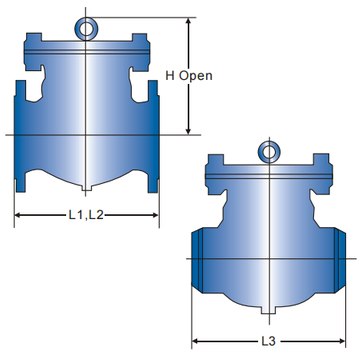

CLASS 300 DIMENSION

Unit: inch

SIZE (in.)	2"	2-1/2"	3"	4"	6"	8"	10"	12"
L1: RF	10.50	11.50	12.50	14.00	17.50	21.00	24.50	28.00
L2: RTJ	11.13	12.13	13.33	14.63	18.13	21.63	25.13	28.63
L3: BW	10.50	11.50	12.50	14.00	17.50	21.00	24.50	28.00
H	6.30	7.44	7.83	8.94	10.94	12.68	15.08	17.13
W.T RF	56	72	108	160	299	406	657	916
(lbs) BW	43	55	88	102	240	317	525	750

Unit: inch

SIZE (in.)	14"	16"	18"	20"	24"	30"	36"
L1: RF	33.00	34.00	38.50	40.00	53.00	62.75	82.00
L2: RTJ	33.63	34.63	39.13	40.75	53.88	63.75	83.00
L3: BW	33.00	34.00	38.50	40.00	53.00	62.75	82.00
H	20.08	20.51	22.52	24.76	28.03	37.00	42.99
W.T RF	1,503	1,649	2,097	2,494	4.500	5,850	10.500
(lbs) BW	1,241	1,305	1,803	2,150	3.,870	5,020	9,450

* 26"and larger are available with ASME/ANSI B16.47 end flanges, either Style A or Style B(formerly MSS SP-44 and API 605).

CAST STEEL SWING CHECK VALVE

- Cast steel swing checkvalve
- Horizontal or verticallines, bolted cover
- Available inwelded or threaded seat rings
- Designed according to API-600

Face to Face	ASME/ANSI B16.10
End Flange	ASME/ANSI B16.5
Buttweld	ASME/ANSI B16.25
Rating	ASME/ANSI Class 600~1500

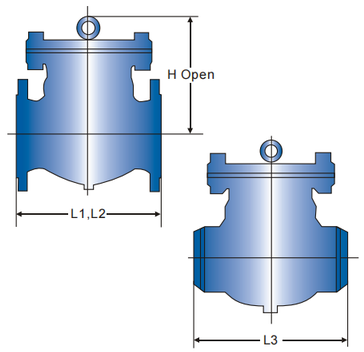

CLASS 600 DIMENSION

Unit: inch

SIZE (in.)	2"	3"	4"	6"	8"	10"	12"	14"	16"	18"	20"	24"
L1: RF	11.50	14.00	17.00	22.00	26.00	31.00	33.00	35.00	39.00	43.00	47.00	55.00
L2: RTJ	11.63	14.13	17.13	22.13	26.13	31.13	33.13	35.13	39.13	43.13	47.25	55.38
L3: BW	11.50	14.00	17.00	22.00	26.00	31.00	33.00	35.00	39.00	43.00	47.00	55.00
H	7.38	8.25	10.06	12.94	14.31	18.25	19.13	22.50	26.00	28.00	31.00	34.00
W.T RF	71	130	247	474	849	1,351	1,918	2,068	2,976	4,451	5,269	6,634
(lbs) BW	66	110	223	364	686	1,081	1,605	1,693	2,469	3,802	4,443	5,137

CLASS 900 DIMENSION

Unit: inch

SIZE (in.)	2"	3"	4"	6"	8"	10"	12"	14"	16"	18"	20"	24"
L1: RF	14.50	15.00	18.00	24.00	29.00	33.00	38.00	40.50	44.50	48.00	52.00	61.00
L2: RTJ	14.63	15.13	18.13	24.13	29.13	33.13	38.13	40.87	44.87	48.50	52.50	61.75
L3: BW	14.50	15.00	18.00	24.00	29.00	33.00	38.00	40.50	44.50	48.00	52.00	61.00
H	10.51	11.42	12.05	13.31	18.11	19.69	22.75	25.47	27.95	30.90	33.46	36.61
W.T RF	161	181	307	582	1,210	1,800	3,200	3,850	5,324	7,150	8.800	12.760
(lbs) BW	119	136	235	247	1,010	1,545	2,720	3,190	4,510	5,940	7,260	9.900

CLASS 1500 DIMENSION

Unit: inch

SIZE (in.)	2"	3"	4"	6"	8"	10"	12"	14"	16"	18"	20"	24"
L1: RF	14.50	18.50	21.50	27.75	32.75	39.00	44.50	49.50	54.50	60.50	65.50	76.50
L2: RTJ	14.63	18.63	21.63	28.00	33.13	39.37	45.12	50.25	55.37	61.37	66.37	77.63
L3: BW	14.50	18.50	21.50	27.75	32.75	39.00	44.50	49.50	54.50	60.50	65.50	76.50
H	10.51	11.65	13.98	18.31	21.26	22.64	26.38	28.54	31.89	35.63	39.57	44.27
W.T RF	161	276	467	1,067	2,356	3,663	5,445	7,128	9,700	13,060	16,130	23,265
(lbs) BW	119	209	362	813	1,910	2,930	4,310	5,600	7,720	10,395	12,770	17,820

TILTING DISC CHECK VALVE

- Cast Steel TiltingDisc Check Valve
- Bolted Cover, Horizontal Lines
- Designed to ASME B16.34, API 6D

Face to Face	ASME/ANSI B16.10
End Flange	ASME/ANSI B16.5
Buttweld	ASME/ANSI B16.25
Class	ASME/ANSI CL150/300/600

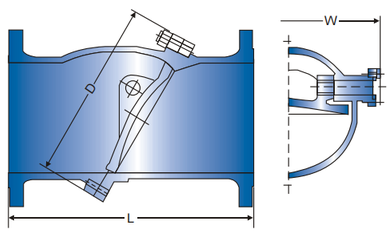

CLASS 150 DIMENSION

Unit: mm

SIZE (in.)	2"	2-1/2"	3"	4"	6"	8"	10"	12"	14"	16"	18"	20"	24"	26"	28"	30"	32"
L	203	216	241	292	356	495	622	698	787	864	978	978	1295	1295	1143	1143	1194
D	160	182	196	230	300	390	432	510	540	635	700	770	900	930	991	1020	1150
W	178	198	224	252	326	426	456	530	576	670	740	818	948	988	1050	1090	1240
W.T(kg)	11	16	22	34	62	112	169	238	337	420	550	685	910	1055	1260	1540	1860

CLASS 300 DIMENSION

Unit: mm

SIZE (in.)	2"	2-1/2"	3"	4"	6"	8"	10"	12"	14"	16"	18"	20"	24"	26"	28"	30"	32"
L	267	292	318	356	444	533	622	711	838	864	978	1016	1346	1346	1295	1372	1448
D	170	196	214	245	320	400	460	540	580	660	725	800	940	970	1040	1080	1210
W	198	220	232	268	360	426	457	572	620	690	760	848	988	1018	1250	1280	1350
W.T(kg)	17	22	32	97	110	162	228	380	443	530	780	980	1320	1364	1762	2050	2870

CLASS 600 DIMENSION

Unit: mm

SIZE (in.)	2"	2-1/2"	3"	4"	6"	8"	10"	12"	14"	16"	18"	20"	24"
L	292	330	356	432	559	660	787	838	889	991	1092	1194	1397
D	185	196	210	270	340	440	520	570	610	690	755	850	990
W	212	225	240	298	405	460	492	602	650	710	780	902	1040
W.T(kg)	27	44	47	115	190	320	430	586	750	1015	1480	2050	2550

PISTON CHECK VALVE

- Cast Steel Check Valve, Lift Piston
- Bolted Cover, Horizontal or Vertical Lines
- Integral or Removable Seat, Metal to Metal
- Designed to ASME B16.34, API 6D

Face to Face	ASME/ANSI B16.10
End Flange	ASME/ANSI B16.5
Buttweld	ASME/ANSI B16.25
Class	ASME/ANSI CL150~CL900

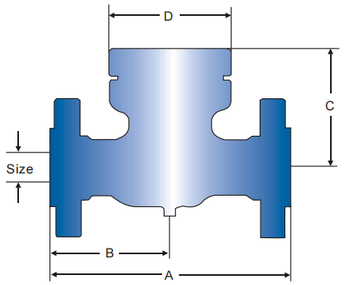

CLASS 150 DIMENSION

Unit: inch

SIZE (in.)		2"	3"	4"	6"	8"	10"	12"
A	RF	10.50	12.50	14.00	17.50	19.50	24.50	27.50
	RTJ	11.13	13.13	14.63	18.13	20.00	25.00	28.00
B	RF	5.25	6.25	7.00	8.75	9.75	12.25	13.75
	RTJ	5.56	6.56	7.31	9.06	10.00	12.50	14.00
C		6.50	8.00	11.25	16.13	16.75	18.50	22.50
D		7.00	8.25	9.75	11.75	14.50	17.00	24.00

CLASS 300 DIMENSION

Unit: inch

SIZE (in.)		2"	3"	4"	6"	8"	10"	12"
A	RF	10.50	12.50	14.00	17.50	21.00	24.50	28.00
	RTJ	11.13	13.13	14.63	18.13	21.63	25.13	28.63
B	RF	5.25	6.25	7.00	8.75	10.50	12.25	14.00
	RTJ	5.56	6.56	7.31	9.06	10.81	12.56	14.31
C		6.50	8.00	11.25	16.13	16.75	18.50	22.50
D		7.00	8.25	9.75	11.75	14.50	17.00	24.00

CLASS 600 DIMENSION

Unit: inch

SIZE (in.)		2"	3"	4"	6"	8"	10"	12"
A	RF	11.50	14.00	17.00	22.00	26.00	31.00	33.00
	RTJ	11.63	14.13	17.13	22.13	26.13	31.13	33.13
B	RF	5.75	7.00	8.50	11.00	13.00	15.50	16.50
	RTJ	5.56	7.06	8.56	11.06	13.06	15.56	16.56
C		6.75	8.25	11.50	16.38	16.75	18.50	22.50
D		7.00	8.25	9.75	11.75	14.50	17.00	24.00

CLASS 900 DIMENSION

Unit: inch

SIZE (in.)		2"	3"	4 "	6"	8 "	10"	12"
A	RF	14.50	15.00	18.00	24.00	29.00	33.00	38.00
	RTJ	14.63	15.13	18.13	24.13	29.13	33.13	38.13
B	RF	7.25	7.50	9.00	12.00	14.50	16.50	19.00
	RTJ	7.31	7.56	9.06	12.06	14.56	16.56	19.06
C		7.00	8.50	11.88	16.75	16.75	18.50	22.50
D		7.00	8.25	9.75	11.75	14.50	17.00	24.00

PRESSURE LOSS CURVES FOR PISTON CHECK VALVES ● FLOW RATE (GALLONS WATER PER MINUTE)

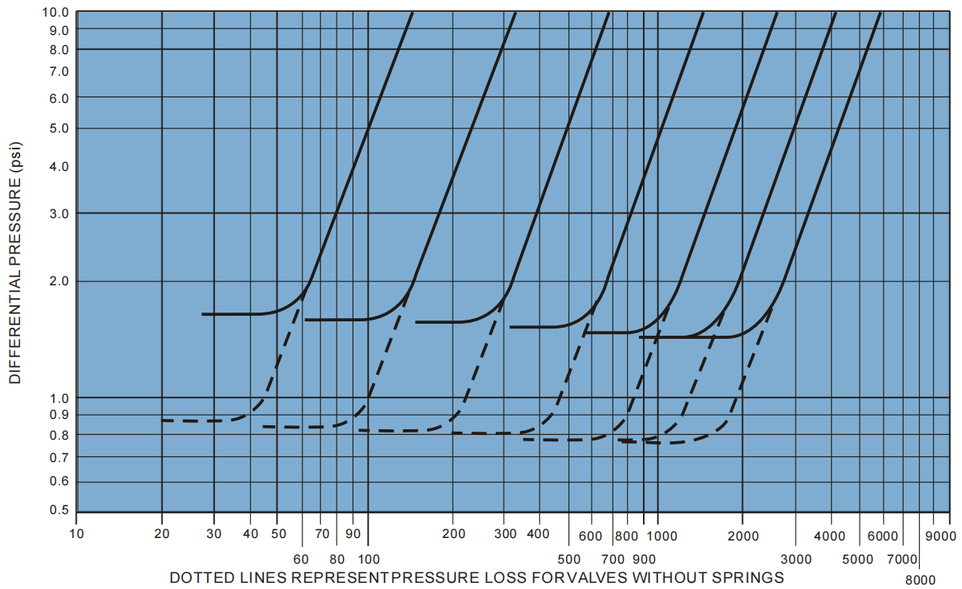

NON SLAM CHECK VALVE CHARACTERISTICS

FEATURES

Extensive research and development, coupled with valid design procedures, have resulted in these unique nonslam check features:

Few moving parts—Disc is the only moving part, minimizing wear.

Axial movement of disc—Disc and seating configuration give streamlined flow path with venturi effect, resulting in low pressure drop.

Short stroke of spring-assisted disc—Inlet flow velocity moves disc axially with short stroke. In response to flow velocity reduction, a compressed spring initiates valve closure and provides quick response.

Spring options—Choice of spring affects critical velocity and valve response. Selection is made on engineering evaluation of specific applications. In absence of this data, a standard spring will be provided.

CHARACTERISTICS

Non slam check valves deliver an effective dynamic response under various flow deceleration conditions. The dynamic performance characteristics of nonslam check valve are compared to swing check and dual plate spring-assisted check valves in Figure 1.

Non slam check valve's unique design features result in superior performance, fast response and lower pressure loss in piping systems.

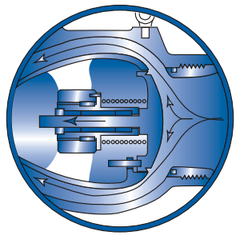

OPENING

Reduced pressure, generated by increased velocity in the minimal flow area results in additional force to assist the disc to open and allows for extra spring loading that facilitates a faster closing time.

This spring force is balanced in the fully open position.

The Non slam check geometry is established by considering the design velocity required to ensure that the disc is stabilized open against its stop even if moderate flow oscillation occurs.

CLOSING

When a noticeable reduction in flow occurs, the disc reacts immediately, limiting backflow and valve slamming:

The spring load, low mass disc, and short displacement ensures a rapid self-dampening response.

For certain applications, the internal geometry can be modified to suit the service conditions.

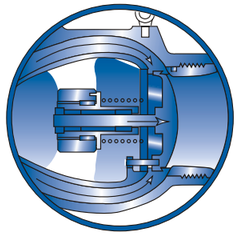

Figure 1

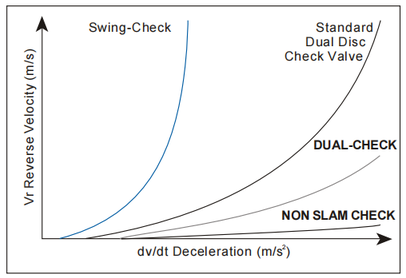

STANDARD MATERIALS OF CONSTRUCTION

Part Name	Standard Carbon Steel	Low Temperature Carbon Steel	Stainless Steel
Valve Body	ASTM A216 WCB	ASTM A352 LCC	ASTM A351 CF8M / 316 Stainless Steel
Diffuser	ASTM A216 WCB	ASTM A352 LCC	ASTM A351 CF8M / 316 Stainless Steel
Valve Disc	ASTM A351 CF8M / 316 Stainless Steel	ASTM A351 CF8M / 316 Stainless Steel	ASTM A351 CF8M / 316 Stainless Steel
Seat	Alloy 625	Alloy 625	Alloy 625
Helical Spring	Alloy X-750	Alloy X-750	Alloy X-750
Radial Guide	Alloy X-750	Alloy X-750	Alloy X-750
Screw	ASTM A193 B8M	ASTM A320 B8M	ASTM A193 B8M
Central Tie Bolt	ASTM A193 B7M	ASTM A320 L7M	ASTM A193 B8M
Guide Bushing	Gr. 630 Stainless Steel	Gr. 630 Stainless Steel	-

Other materials available upon request to meet specific service requirements.

NON SLAM CHECK VALVE

- Cast Steel Check Valve, Axial Flow
- Uni-body, Horizontal or Vertical Lines
- Spring-assisted slow closing, Watertight Seating
- Designed to ASME B16.34, API 6D

Face to Face	ASME/ANSI B16.10
End Flange	ASME/ANSI B16.5
Buttweld	ASME/ANSI B16.25
Class	ASME/ANSI CL150~CL2500

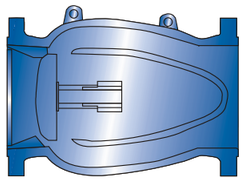

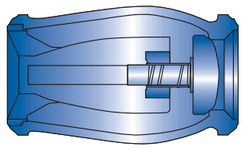

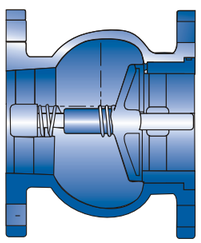

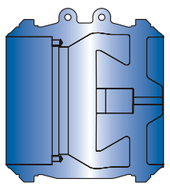

CLASS 150 DIMENSION

SIZE (IN)	DBV Standard R.T.J	DBV Standard R.F	DBV Standard W.E	API 6D Standard R.T.J	API 6D Standard R.F	API 6D Standard W.E
						Unit: mm
2	-	-	-	216	203	203
3	-	-	-	254	241	241
4	-	-	-	305	292	292
6	266	253	265	368	356	356
8	308	295	305	508	495	495
10	378	365	380	635	622	622
12	448	435	450	711	698	698
14	488	475	490	800	787	787
16	558	545	560	876	864	864
18	623	610	630	991	978	978
20	688	675	700	991	978	978
24	823	810	835	1308	1295	1295
28	-	549	579	-	8441	8441
30	-	101	5401	-	4251	4251
32	-	1080	1115	-	-	-
36	-	1215	1250	-	1956	1956
40	-	1350	1390	-	-	-
42	-	1415	1460	-	-	-
48	-	1615	1650	-	-	-

CLASS 300 DIMENSION

SIZE (IN)	DBV Standard R.T.J	DBV Standard R.F	DBV Standard W.E	API 6D Standard R.T.J	API 6D Standard R.F	API 6D Standard W.E
						Unit: mm
2	-	-	-	283	267	267
3	-	-	-	333	317	317
4	-	-	-	371	356	356
6	269	253	265	460	444	444
8	311	295	305	549	533	533
10	381	365	380	638	622	622
12	451	435	450	727	711	711
14	491	475	490	854	838	838
16	561	545	560	879	864	864
18	626	610	630	994	978	978
20	694	675	700	1035	1016	1016
24	832	810	835	1368	1346	1346
28	970	945	975	1524	1499	1499
30	1035	1010	1045	1619	1594	1594
32	1109	1080	1115	-	-	-
36	1244	1215	1250	2112	2083	2083
40	-	1350	1390	-	-	-
42	-	1415	1460	-	-	-
48	-	1615	1650	-	-	-

CLASS 400 DIMENSION

SIZE (IN)	DBV Standard R.T.J	DBV Standard R.F	DBV Standard W.E	API 6D Standard R.T.J	API 6D Standard R.F	API 6D Standard W.E
						Unit: mm
2	-	-	-	295	292	292
3	-	-	-	359	356	356
4	-	-	-	409	406	406
6	256	253	265	498	495	495
8	298	295	305	600	597	597
10	368	365	380	676	673	673
12	438	435	450	765	762	762
14	478	475	490	892	889	889
16	548	545	560	905	902	902
18	613	610	630	1019	1016	1016
20	681	675	700	1060	1054	1054
24	819	810	835	1407	1397	1397
28	958	945	975	1613	1600	1600
30	1023	1010	1045	1664	1651	1651
32	1096	1080	1115	-	-	-
36	1231	1215	1250	2099	2083	2083
40	-	1350	1390	-	-	-
42	-	1415	1460	-	-	-
48	-	1615	1650	-	-	-

CLASS 600 DIMENSION

SIZE (IN)	DBV Standard R.T.J	DBV Standard R.F	DBV Standard W.E	API 6D Standard R.T.J	API 6D Standard R.F	API 6D Standard W.E
						Unit: mm
2	-	-	-	295	292	292
3	-	-	-	359	356	356
4	-	-	-	435	432	432
6	256	253	265	562	559	559
8	298	295	305	664	660	660
10	368	365	380	791	787	787
12	438	435	450	841	838	838
14	478	475	490	892	889	889
16	548	545	560	994	991	991
18	613	610	630	1095	1092	1092
20	681	675	700	1200	1194	1194
24	819	810	835	1407	1397	1397
28	958	945	975	1613	1600	1600
30	1023	1010	1045	1664	1651	1651
32	1096	1080	1115	-	-	-
36	1231	1215	1250	2099	2083	2083
40	-	1350	1390	-	-	-
42	-	1415	1460	-	-	-
48	-	1615	1650	-	-	-

CLASS 2500 DIMENSION

SIZE (IN)	DBV Standard R.T.J	DBV Standard R.F	DBV Standard W.E	API 6D Standard R.T.J	API 6D Standard R.F	API 6D Standard W.E
						Unit: mm
2	-	-	-	454	451	451
3	-	-	-	584	578	578
4	304	295	253	683	673	673
6	403	390	324	927	914	914
8	446	430	367	1038	1022	1022
10	562	540	424	1292	1270	1270
12	617	595	486	1445	1422	1422

CLASS 900 DIMENSION

SIZE (IN)	DBV Standard R.T.J	DBV Standard R.F	DBV Standard W.E	API 6D Standard R.T.J	API 6D Standard R.F	API 6D Standard W.E
						Unit: mm
2	-	-	-	371	368	368
3	-	-	-	384	381	381
4	238	235	238	460	457	457
6	306	303	306	613	610	610
8	344	341	344	740	737	737
10	394	391	394	841	838	838
12	451	448	451	968	965	965
14	494	485	494	1038	1029	1029
16	610	558	610	1140	1130	1130
18	632	619	632	1232	1219	1219
20	697	684	697	1334	1321	1321
24	838	819	838	1568	1549	1549

CLASS 1500 DIMENSION

SIZE (IN)	DBV Standard R.T.J	DBV Standard R.F	DBV Standard W.E	API 6D Standard R.T.J	API 6D Standard R.F	API 6D Standard W.E
						Unit: mm
2	-	-	-	371	368	368
3	-	-	-	473	470	470
4	238	235	238	549	546	546
6	306	300	306	711	705	705
8	344	335	344	841	832	832
10	394	385	394	1000	991	991
12	451	435	451	1146	1130	1130
14	494	475	494	1276	1257	1257
16	567	545	567	1407	1384	1384
18	632	610	632	1559	1537	1537
20	697	675	697	1686	1664	1664
24	838	810	838	1972	1943	1943

DBV DUAL PLATE CHECK VALVE DESIGN FEATURES

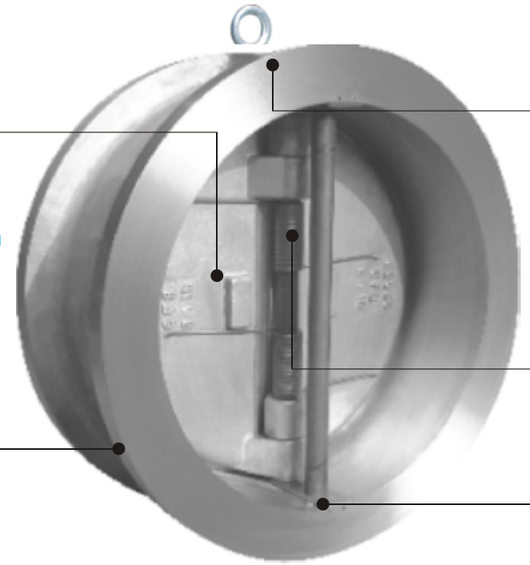

LAPPED BODY & DISC SEATS

The heart of each valve is the seat/seal interface.
Our valves are manufactured using the most updated machining methods and equipment to achieve maximum flatness with a fine lapped finish.
The end result is valves that easily meet and exceed test requirements of API 598 for metal-seated check valves.

RETAINERLESS BODY DESIGN

The Proquip dual plate check valve's body is essentially a short, heavy wall cylinder with no holes through the body wall. There is no need for retainers and leakage to the outside is impossible.

HIGH TORSION SPRING

For potentially severe applications, a high torsion spring ensures the valve closes as quickly as possible.

INTRINSICALLY FIRE SAFE

With no drilling through the body wall, the Proquip dual plate check valve is intrinsically fire safe.

SUPERIOR HINGE DESIGN

In order to eliminate seat wear during the opening cycle, all dual plate check valves incorporate clearance between the hinge pin and holders, or hinge pin and disc bore.
This clearance allows the disc assembly to lift off the seat prior to disc rotation preventing the heel of each disc from scraping across the body seat. Conventional designs have an oversize bore in the discs or bearings, allowing constant side to side movement of discs and increased chance of premature failure.

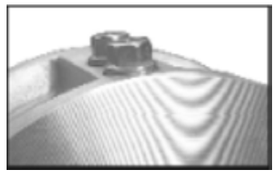

Common dual plate check valves

Conventional dual plate check valves require holes through the body wall to facilitate the installation of the hinge and stoppins. These holes are sealed by threaded pipeplugs called retainers. After being in service for a period of time, these plugs often leak due to temperature cycling, vibration and other causes.

DBV WAFER CHECK VALVES MAIN PARTS MATERIALS

CARBON STEEL

BODY	DISC	BODY SEAT	DISC SEAT	SPRING	WETTED PARTS
A216 Gr. WCB	A351 Gr. CF8M	Same as Body	Same as Disc	Inconel X-750	316 SS
A216 Gr. WCB	A351 Gr. CF8M	Viton	Same as Disc	Inconel X-750	316 SS
A216 Gr. WCB	A351 Gr. CF8M	Stellite overlay	Same as Disc	Inconel X-750	316 SS
A216 Gr. WCB	A217 Gr. CA15	410 SS overlay	Same as Disc	Inconel X-750	410 SS
A216 Gr. WCB	A217 Gr. CA15	Stellite overlay	Same as Disc	Inconel X-750	410 SS

LOW TEMPERATURE CARBON STEEL

BODY	DISC	BODY SEAT	DISC SEAT	SPRING	WETTED PARTS
A352 Gr. LCC	A351 Gr. CF8M	Same as Body	Same as Disc	Inconel X-750	316 SS
A352 Gr. LCC	A351 Gr. CF8M	Buna-N	Same as Disc	Inconel X-750	316 SS
A352 Gr. LCC	A351 Gr. CF8M	Stellite overlay	Same as Disc	Inconel X-750	316 SS

STAINLESS STEEL

BODY	DISC	BODY SEAT	DISC SEAT	SPRING	WETTED PARTS
A351 Gr. CF8M	A351 Gr. CF8M	Same as Body	Same as Disc	Inconel X-750	316 SS
A351 Gr. CF8M	A351 Gr. CF8M	Viton	Same as Disc	Inconel X-750	316 SS
A351 Gr. CF8M	A351 Gr. CF8M	Stellite overlay	Same as Disc	Inconel X-750	316 SS

Other Materials Available Upon Request

DUAL PLATE WAFER CHECK VALVE
FLOW VOLUME VS PRESSURE DROP

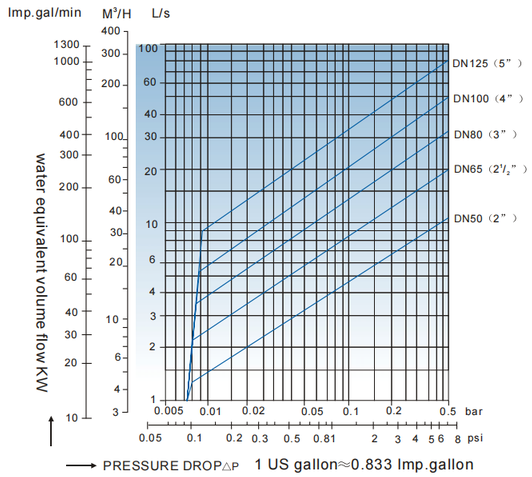

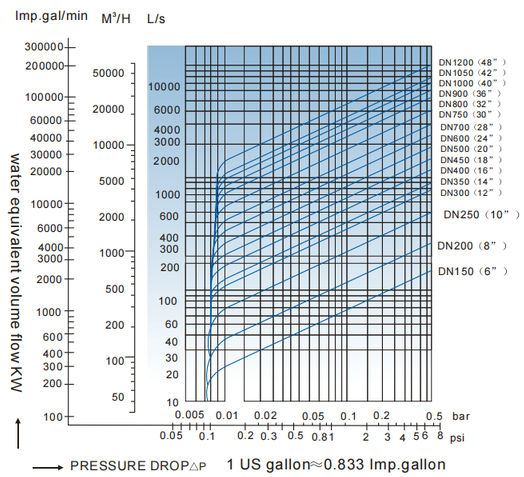

DUAL PLATE WAFER CHECK VALVE FRICTION FACTOR FLOW COEFFICIENCY

SIZE	Friction Factor Under Valve Full OPEN ξ		Flow Coefficiency Under Standard Temp.		Flow Direction ↑ →
(in.)	Cv	Kv	Cv(U.S)	Cv(U.k)	Approx. Open Pressure KPa
2	2.6	63	74	62	2 1
2-1/2	2.4	109	128	107	2 1
3	2.3	172	201	169	2 1
4	2.0	289	338	283	2 1
5	1.8	476	557	466	2 1
6	1.5	750	878	735	2 1
8	1.3	1432	1675	1403	2 1
10	1.2	2330	2726	2283	2 1
12	1.0	3676	4301	3602	2 1
14	0.9	5274	6171	5169	2 1
16	0.8	7306	8548	7160	3 1
18	0.8	9246	10818	9061	3 1
20	0.8	11415	13356	11187	3 1
24	0.7	17573	20560	17222	3 1
28	0.7	23919	27985	23441	4 1
30	0.7	27458	32126	26909	4 1
32	0.7	31241	36552	30616	4 1
36	0.7	39539	46261	38748	4 1
40	0.7	48814	57112	47838	4 1
42	0.7	53817	62966	52741	4 1
48	0.7	70292	82242	68886	4 1

WAFER DUAL PLATE CHECK VALVE

- Cast Steel Check Valve, Wafer Ends, Dual Plates
- Spring Loaded, Horizontal or Vertical Lines
- Designed to API594, API6D

Face to Face	API594/API 6D
Wall Thickness	ASME B16.34
End Flange	NPS2~24: ASME B16.5*
Class	ASME/ANSI CL150

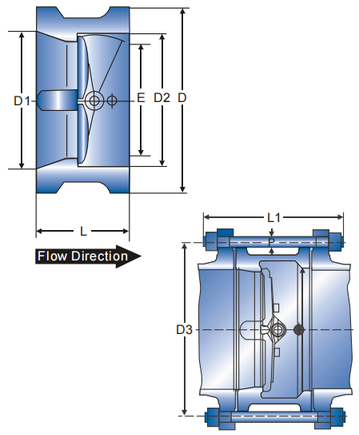

CLASS 150 DIMENSION

SIZE (in.)	L	D	D1	D2	W.T (kg)	D3	STUD/BOLTING DETAILS NO.	DIA. in	DIA. mm	LENGTH RF	LENGTH RTJ
										Unit: mm	
1-1/2	60	83	38	45	2	98.5	4	1/2	M14	130	145
2	60	103	51	56	2	120.5	4	5/8	M16	140	155
2-1/2	67	122	65	73	3	139.5	4	5/8	M16	150	165
3	73	135	80	88	4	152.5	4	5/8	M16	160	175
4	73	173	102	108	6	190.5	8	5/8	M16	170	185
5	86	195	127	132	8	216.0	8	3/4	M20	190	205
6	98	220	152	160	12	241.5	8	3/4	M20	205	220
8	127	277	203	210	25	298.5	8	3/4	M20	240	255
10	146	337	254	266	38	362.0	12	7/8	M24	270	285
12	181	407	305	310	52	432.0	12	7/8	M24	310	325
14	184	448	350	355	80	476.0	12	1	M27	325	340
16	191	512	400	405	115	540.0	16	1	M27	340	355
18	203	547	450	455	138	578.0	16	1-1/8	M30	365	380
20	219	604	500	505	162	635.0	20	1-1/8	M30	385	400
24	222	715	600	605	330	749.5	20	1-1/4	M33	405	420
26	222	722	633	650	360	744.5	36	3/4	M20	365	-
28	305	773	700	700	380	795.5	40	3/4	M20	455	-
30	305	824	746	750	420	846.0	44	3/4	M20	455	-
32	305	878	796	800	260	900.0	48	3/4	M20	460	-
36	368	983	874	894	630	1009.5	44	7/8	M24	540	-
40	432	1090	976	985	870	1120.5	44	1	M27	620	-
42	432	1142	1050	1055	960	1171.5	48	1	M27	625	-
44	432	1193	1070	1070	1140	1222	52	1	M27	630	-
48	524	1302	1200	1205	1400	1335.0	44	1-1/8	M30	740	-
54	591	1460	1312	1315	2240	1492	44	1-1/8	M30	820	-
56	591	1512	1360	1370	2830	1543	60	1-1/8	M30	820	-
60	660	1628	1458	1470	3200	1662	52	1-1/4	M33	900	-

* 26"and larger are available with ASME/ANSI B16.47 end flanges,either Style A or Style B (formerly MSS SP-44 and API 605).

WAFER DUAL PLATE CHECK VALVE

- Cast Steel Check Valve, Wafer Ends, Dual Plates
- Spring Loaded, Horizontal or Vertical Lines
- Designed to API594, API6D

Face to Face	API594/API 6D
Wall Thickness	ASME B16.34
End Flange	NPS2~24: ASME B16.5*
Class	ASME/ANSI CL300

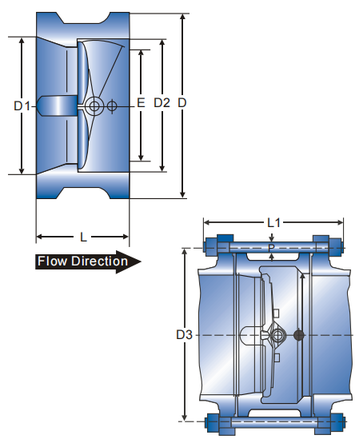

CLASS 300 DIMENSION

SIZE (in.)	L	D	D1	D2	W.T (kg)	D3	STUD/BOLTING DETAILS NO.	DIA. in	DIA. mm	LENGTH RF	LENGTH RTJ
										Unit: mm	
2	60	110	51	58	3	127.0	8	5/8	M16	155	175
2-1/2	67	128	65	73	4	149.0	8	3/4	M20	175	195
3	73	147	80	88	6	168.5	8	3/4	M20	190	210
4	73	179	102	108	8	200.0	8	3/4	M20	195	215
5	86	214	127	132	12	235.0	8	3/4	M20	215	235
6	98	249	152	160	18	270.0	12	3/4	M20	230	250
8	127	305	203	210	30	330.0	12	7/8	M24	280	300
10	146	359	254	266	50	387.5	16	1	M27	315	335
12	181	420	305	310	75	451.0	16	1-1/8	M30	365	385
14	222	483	350	355	115	514.5	20	1-1/8	M30	410	430
16	232	537	400	405	190	571.5	20	1-1/4	M33	435	455
18	264	594	450	455	200	628.5	24	1-1/4	M33	475	495
20	292	652	500	505	260	686.0	24	1-1/4	M33	510	535
24	318	772	600	608	410	813.0	24	1-1/2	M39x3	560	585
26	356	767	633	640	560	803	32	1-1/4	M33	625	-
28	368	821	685	685	580	857	36	1-1/4	M33	635	-
30	368	882	735	740	660	921.0	36	1-3/8	M39x3	650	-
32	368	936	784	784	970	978	32	1-1/2	M39x3	675	-
36	483	1044	873	880	1010	1089.0	32	1-5/8	M42x3	800	-
40	546	1146	976	985	1420	1191	40	1-5/8	M42x3	885	-
42	568	1196	1035	1045	1540	1244.5	36	1-3/4	M45x3	920	-
48	629	1365	1166	1190	2250	1416.0	40	1-7/8	M48x3	1010	-
54	718	1526	1312	1315	3100	1578	48	1-7/8	M48x3	1140	-
60	838	1704	1458	1470	4310	1764	40	2-1/4	M56x3	1280	-

* 26"and larger are available with ASME/ANSI B16.47 end flanges,either Style A or Style B (formerly MSS SP-44 and API 605).

WAFER DUAL PLATE CHECK VALVE

- Cast Steel Check Valve, Wafer Ends, Dual Plates
- Spring Loaded, Horizontal or Vertical Lines
- Designed to API594, API6D

Face to Face	API594/API 6D
Wall Thickness	ASME B16.34
End Flange	NPS2~24: ASME B16.5*
Class	ASME/ANSI CL600/900

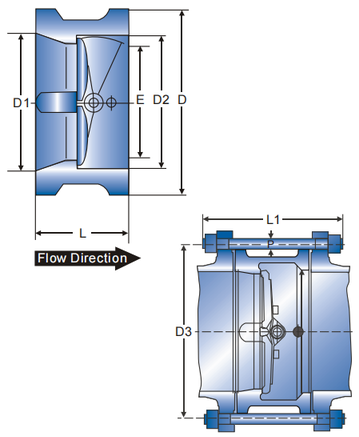

CLASS 600 DIMENSION

SIZE (in.)	L	D	D1	D2	W.T (kg)	D3	STUD/BOLTING DETAILS NO.	DIA. in	DIA. mm	LENGTH RF	LENGTH RTJ
										Unit: mm	
2	60	110	51	58	4	127.0	8	5/8	M16	175	180
2-1/2	67	128	65	73	5	149.0	8	3/4	M20	195	200
3	73	147	80	88	8	168.5	8	3/4	M20	210	215
4	79	191	102	108	11	216.0	8	7/8+	M24	235	240
5	105	239	127	136	20	267.0	8	1	M27	280	285
6	136	264	152	162	25	292.0	12	1	M27	320	325
8	165	318	200	212	50	349.0	12	1-1/8	M30	370	375
10	213	398	250	266	90	432.0	16	1-1/4	M33	440	445
12	229	455	305	312	140	489.0	20	1-1/4	M33	460	465
14	273	490	337	355	220	527.0	20	1-3/8	M36x3	520	525
16	305	562	387	400	360	603.0	20	1-1/2	M39x3	575	580
18	362	610	438	450	380	654.0	20	1-5/8	M42x3	650	655
20	368	680	489	500	510	724.0	24	1-5/8	M42x3	670	680
24	438	786	591	600	830	838.0	24	1-7/8	M48x3	780	795

CLASS 900 DIMENSION

SIZE (in.)	L	D	D1	D2	W.T (kg)	D3	STUD/BOLTING DETAILS NO.	DIA. in	DIA. mm	LENGTH RF	LENGTH RTJ
										Unit: mm	
2	70	140	51	58	8	165.0	8	7/8	M24	225	230
2-1/2	83	162	65	73	10	190.5	8	1	M27	250	255
3	83	165	80	90	14	190.5	8	7/8	M24	240	245
4	102	204	102	108	20	235.0	8	1-1/8	M30	285	290
5	110	245	127	136	30	279.5	8	1-1/4	M33	310	315
6	159	286	150	162	40	317.5	12	1-1/8	M30	365	370
8	206	356	200	212	80	393.5	12	1-3/8	M36x3	440	445
10	241	432	250	266	140	470.0	16	1-3/8	M36x3	490	495
12	292	495	305	312	220	533.5	20	1-3/8	M36x3	560	565
14	356	518	337	355	350	559.0	20	1-1/2	M39x3	645	655
16	384	572	387	400	470	616.0	20	1-5/8	M42x3	685	695
18	451	635	438	450	600	686.0	20	1-7/8	M48x3	790	805
20	451	695	487	496	820	749.5	20	2	M52x3	810	825
24	495	835	591	600	1050	901.5	20	2-1/2	M64x3	945	965

* 26"and larger are available with ASME/ANSI B16.47 end flanges,either Style A or Style B (formerly MSS SP-44 and API 605).

WAFER DUAL PLATE CHECK VALVE

- Cast Steel Check Valve, Wafer Ends, Dual Plates
- Spring Loaded, Horizontal or Vertical Lines
- Designed to API594, API6D

Face to Face	API594/API 6D
Wall Thickness	ASME B16.34
End Flange	NPS2~24: ASME B16.5*
Class	ASME/ANSI CL1500

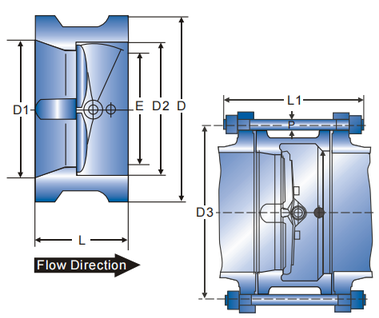

CLASS 1500 DIMENSION

SIZE (in.)	L	D	D1	D2	W.T (kg)	D3	STUD/BOLTING DETAILS NO.	DIA. in	DIA. mm	LENGTH RF	LENGTH RTJ
										Unit: mm	
2	70	140	51	58	8	165.0	8	7/8	M24	225	230
2-1/2	83	162	65	73	10	190.5	8	1	M27	250	255
3	83	172	80	90	18	203.0	8	1-1/8	M30	270	275
4	102	207	102	108	25	241.5	8	1-1/4	M33	310	315
5	110	252	127	136	50	292.0	8	1-1/2	M39x3	370	375
6	159	280	150	162	65	317.5	12	1-3/8	M36x3	430	440
8	206	350	200	212	130	393.5	12	1-5/8	M42x3	510	520
10	248	433	254	266	210	482.5	12	1-7/8	M48x3	600	610
12	305	518	305	312	380	571.5	16	2	M52x3	695	715
14	356	576	337	355	550	635.0	16	2-1/4	M56x3	775	800
16	384	639	387	400	630	705.0	16	2-1/2	M64x3	850	880
18	468	701	430	438	790	774.5	16	1-3/4	M70x3	955	985
20	533	753	478	487	1270	832	16	3	M76x3	1065	1095
24	559	897	570	578	2710	990.5	16	3-1/2	M90x3	1170	1205

* 26"and larger are available with ASME/ANSI B16.47 end flanges,either Style A or Style B (formerly MSS SP-44 and API 605).

LUG DUAL PLATE CHECK VALVE

- Cast Steel Check Valve, Wafer Ends
- Dual Plates, Fully Lugged, Spring Loaded
- Horizontal or Vertical Lines
- Designed to API594, API6D

Face to Face	API594/API 6D
Wall Thickness	ASME B16.34
End Flange	NPS2~24: ASME B16.5*
Class	ASME/ANSI CL150

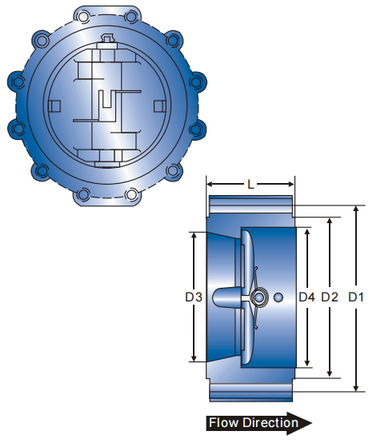

CLASS 150 DIMENSION

SIZE (in.)	L	D1	D2	D3	D4	W.T (kg)	HOLE DIA. in	HOLE DIA. mm	STUD/BOLTING DETAILS NO.	DIA. in	DIA. mm	LENGTH RF	LENGTH RJ
												Unit: mm	
2	60	120.5	92	51	56	4	3/4	19	4	5/8	M16	140	155
2-1/2	67	139.5	105	65	73	5.5	3/4	19	4	5/8	M16	150	165
3	73	152.5	127	80	88	7	3/4	19	4	5/8	M16	160	175
4	73	190.5	157	102	108	11	3/4	19	8	5/8	M16	170	185
5	86	216	186	127	132	15	7/8	22	8	3/4	M20	190	205
6	98	241.5	216	152	160	19	7/8	22	8	3/4	M20	205	220
8	127	298.8	270	203	210	36	7/8	22	8	3/4	M20	240	255
10	146	362	324	254	266	61	1	25	12	7/8	M24	270	285
12	181	432	381	305	310	119	1	25	12	7/8	M24	310	325
14	184	476	413	350	355	131	1-1/8	29	12	1	M27	325	340
16	191	540	470	400	405	180	1-1/8	29	16	1	M27	340	355
18	203	578	533	450	455	203	1-1/4	32	16	1-1/8	M30	365	380
20	219	635	584	500	505	275	1-1/4	32	20	1-1/8	M30	385	400
24	222	749.5	692	600	605	314	1-1/4	35	20	1-1/4	M33	405	420
28	305	795.5	762	700	700	910	7/8	22	40	3/4	M20	455	-
30	305	846	813	746	750	1025	7/8	22	44	3/4	M20	455	-
32	305	900	864	796	800	1344	7/8	22	48	3/4	M20	460	-
36	368	1009.5	972	898	910	1536	1	25	44	7/8	M24	540	-
42	432	1171.5	1130	1050	1055	2310	1-1/8	29	48	1	M27	625	-
48	524	1335	1289	1200	1205	3364	1-1/4	32	44	1-1/8	M30	740	-

* 26"and larger are available with ASME/ANSI B16.47 end flanges,either Style A or Style B (formerly MSS SP-44 and API 605).

LUG DUAL PLATE CHECK VALVE

- Cast Steel Check Valve, Wafer Ends
- Dual Plates, Fully Lugged, Spring Loaded
- Horizontal or Vertical Lines
- Designed to API594, API6D

Face to Face	API594/API 6D
Wall Thickness	ASME B16.34
End Flange	NPS2~24: ASME B16.5*
Class	ASME/ANSI CL300

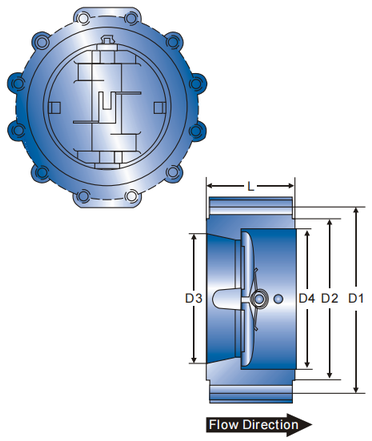

CLASS 300 DIMENSION

SIZE (in.)	L	D1	D2	D3	D4	W.T (kg)	HOLE DIA. in	HOLE DIA. mm	STUD/BOLTING DETAILS NO.	DIA. in	DIA. mm	LENGTH RF	LENGTH RJ
												Unit: mm	
2	60	127	92	51	58	6	3/4	19	8	5/8	M16	155	175
2-1/2	67	149	105	65	73	7	7/8	22	8	3/4	M20	175	195
3	73	168.5	127	80	88	10	7/8	22	8	3/4	M20	190	210
4	73	200	157	102	108	16	7/8	22	8	3/4	M20	175	215
5	86	235	186	127	132	29	7/8	22	8	3/4	M20	215	235
6	98	270	216	152	160	32	7/8	22	12	3/4	M20	230	250
8	127	330	270	203	210	55	1	25	12	7/8	M24	280	300
10	146	387.5	324	254	266	82	1-1/8	29	16	1	M27	315	335
12	181	451	381	305	310	92	1-1/4	32	16	1-1/8	M30	365	385
14	222	514.5	413	350	355	251	1-1/4	32	20	1-1/8	M30	410	430
16	232	571.5	470	405	405	342	1-3/8	35	20	1-1/4	M33	435	455
18	264	628.5	533	455	455	391	1-3/8	35	24	1-1/4	M33	475	495
20	292	686	584	505	505	536	1-3-8	35	24	1-1/4	M33	510	535
24	318	813	692	608	608	833	1-5/8	41	24	1-1/2	M39	560	585
30	368	921	845	735	740	1395	1-1/2	38	36	1-3/8	M36	650	-
36	483	1089	1010	873	880	1862	1-3/4	45	32	1-5/8	M42	800	-
42	568	1245	1168	1035	1045	3861	1-7/8	48	36	1-3/4	M45	920	-
48	629	1416	1327	1179	1190	4370	2	51	40	1-7/8	M48	1010	-

* 26"and larger are available with ASME/ANSI B16.47 end flanges,either Style A or Style B (formerly MSS SP-44 and API 605).

LUG DUAL PLATE CHECK VALVE

- Cast Steel Check Valve, Wafer Ends
- Dual Plates, Fully Lugged, Spring Loaded
- Horizontal or Vertical Lines
- Designed to API594, API6D

Face to Face	API594/API 6D
Wall Thickness	ASME B16.34
End Flange	NPS2~24: ASME B16.5*
Class	ASME/ANSI CL600/900

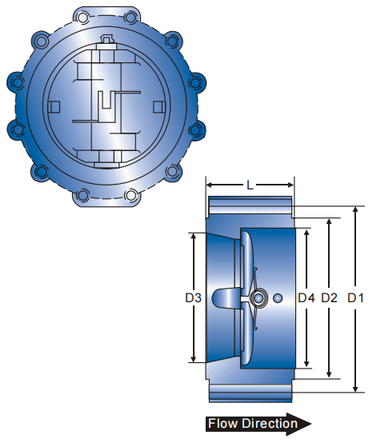

CLASS 600 DIMENSION

SIZE (in.)	L	D1	D2	D3	D4	W.T (kg)	HOLE DIA. in	HOLE DIA. mm	STUD/BOLTING DETAILS NO.	DIA. in	DIA. mm	LENGTH RF	LENGTH RJ
												Unit: mm	
2	60	127	92	51	58	6.5	3/4	19	8	5/8	M16	175	180
2-1/2	67	149	100	65	73	8	7/8	22	8	3/4	M20	195	200
3	73	168	127	80	88	10	7/8	22	8	3/4	M20	210	215
4	79	216	157	102	108	21	1	25	8	7/8	M24	235	240
5	105	266.5	186	127	136	41	1-1/8	29	8	1	M27	280	285
6	136	292	216	152	162	57	1-1/8	29	12	1	M27	320	325
8	165	349	270	200	212	94	1-1/8	32	12	1-1/8	M30	370	375
10	213	432	324	250	266	164	1-3/8	35	16	1-1/4	M33	440	445
12	229	489	381	305	312	213	1-3/8	35	20	1-1/4	M33	460	465
14	273	527	413	337	355	343	1-1/2	38	20	1-3/8	M36	520	525
16	305	603	470	387	400	476	1-5/8	41	20	1-1/2	M39	575	580
18	362	654	533	438	450	685	1-3/4	44	20	1-5/8	M42	650	655
20	368	724	584	489	500	908	1-3/4	44	24	1-5/8	M42	670	680
24	438	838	692	591	600	1088	2	52	24	1-7/8	M48	780	790

CLASS 900 DIMENSION

SIZE (in.)	L	D1	D2	D3	D4	W.T (kg)	HOLE DIA. in	HOLE DIA. mm	STUD/BOLTING DETAILS NO.	DIA. in	DIA. mm	LENGTH RF	LENGTH RJ
												Unit: mm	
2	70	165.1	92	51	58	13	1	26	8	7/8	M24	225	230
2-1/2	83	190.5	105	65	73	18	1-1/8	29	8	1	M27	250	255
3	83	190.5	127	80	90	21	1	26	8	7/8	M24	240	245
4	102	234.9	157	102	108	36	1-1/4	32	8	1-1/8	M30	285	290
5	110	279.4	186	127	136	65	1-3/8	35	8	1-1/4	M33	310	315
6	159	317.5	216	150	162	92	1-1/4	32	12	1-1/8	M30	365	370
8	206	393.7	270	200	212	174	1-1/2	39	12	1-3/8	M36	440	445
10	241	469.9	324	250	266	264	1-1/2	39	16	1-3/8	M36	490	495
12	292	533.4	381	305	312	211	1-1/2	39	20	1-3/8	M36	560	565
14	356	558.8	413	337	355	612	1-5/8	42	20	1-1/2	M39	645	655
16	384	615.9	470	387	400	712	1-3/4	45	20	1-5/8	M42	685	695
18	451	685.8	533	438	450	1160	2	51	20	1-7/8	M48	790	805
20	451	749.3	584	487	496	1568	2-1/8	54	20	2	M52	810	825
24	495	901.7	692	591	600	1881	2-5/8	67	20	2-1/2	M64	945	965

LUG DUAL PLATE CHECK VALVE

- Cast Steel Check Valve, Wafer Ends
- Dual Plates, Fully Lugged, Spring Loaded
- Horizontal or Vertical Lines
- Designed to API594, API6D

Face to Face	API594/API 6D
Wall Thickness	ASME B16.34
End Flange	NPS2~24: ASME B16.5*
Class	ASME/ANSI CL1500

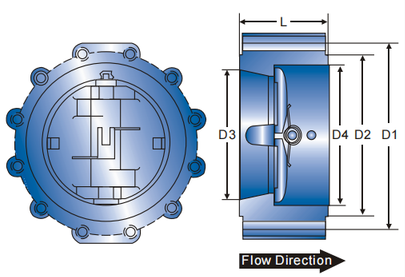

CLASS 1500 DIMENSION

SIZE (in.)	L	D1	D2	D3	D4	W.T (kg)	HOLE DIA. in	HOLE DIA. mm	STUD/BOLTING DETAILS NO.	DIA. in	DIA. mm	LENGTH RF	LENGTH RJ
												Unit: mm	
2	70	165.1	58	92	51	14	1	26	8	7/8	M24	225	230
2-1/2	83	190.5	73	105	65	19	1-1/8	29	8	1	M27	250	255
3	83	203.2	90	127	80	25	1-1/4	32	8	1-1/8	M30	270	275
4	102	241.3	108	157	102	43	1-3/8	35	8	1-1/4	M33	310	315
5	110	292.1	136	186	127	72	1-5/8	42	8	1-1/2	M39	370	375
6	159	317.5	162	216	150	101	1-1/2	39	12	1-3/8	M36	430	440
8	206	393.7	212	270	200	240	1-3/4	45	12	1-5/8	M42	510	520
10	248	482.6	266	324	254	306	2	51	12	1-7/8	M48	600	610
12	305	571.5	312	381	305	541	2-1/8	54	16	2	M52	695	715
14	356	635	355	413	337	932	2-3/8	61	16	2-1/4	M56	775	800
16	384	704.8	400	470	387	980	2-5/8	67	16	2-1/2	M64	850	880

* 26"and larger are available with ASME/ANSI B16.47 end flanges,either Style A or Style B (formerly MSS SP-44 and API 605).

FLANGED DUAL PLATE CHECK VALVE

- Cast Steel Check Valve, Double Flanged Ends
- Dual Plates, Spring Loaded
- Horizontal or Vertical Lines
- Designed to API594, API6D

Face to Face	API594/API 6D
Wall Thickness	ASME B16.34
End Flange	NPS2~24: ASME B16.5*
Class	ASME/ANSI CL150/300

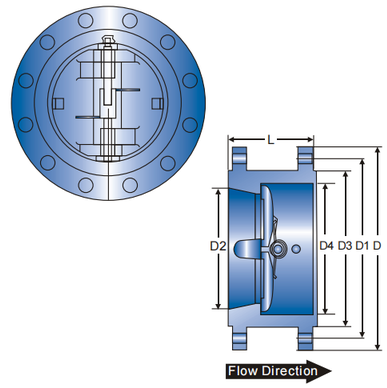

CLASS 150 DIMENSION

SIZE (in.)	L	D	D1	D2	D3	D4	W.T (kg)	HOLE DIA. in	HOLE DIA. mm	STUD/BOLTING DETAILS NO.	DIA. in	DIA. mm	LENGTH RF	LENGTH RJ
													Unit: mm	
8	127	343	298.5	203	270	210	63	7/8	22	8	3/4	M20	120	135
10	146	406	362	254	324	266	93	1	25	12	7/8	M24	135	150
12	181	483	432	305	381	310	170	1	25	12	7/8	M24	135	150
14	184	533	476	350	413	355	199	1-1/8	29	12	1	M27	145	160
16	191	597	540	400	470	405	246	1-1/8	29	16	1	M27	155	170
18	203	635	578	450	533	455	290	1-1/4	32	16	1-1/8	M30	165	180
20	219	699	635	500	584	505	348	1-1/4	32	20	1-1/8	M30	170	185
24	222	813	749.5	600	692	605	396	1-1/4	35	20	1-1/4	M33	185	200
28	305	837	795.5	700	762	700	1270	7/8	22	40	3/4	M20	205	
30	305	887	846	746	813	750	1987	7/8	22	44	3/4	M20	210	
32	305	941	900	796	864	800	2925	7/8	22	48	3/4	M20	225	
36	368	1057	1009.5	898	972	910	1430	1	25	44	7/8	M24	250	
42	432	1226	1171.5	1050	1130	1055	2377	1-1/8	29	48	1	M27	275	
48	524	1392	1335	1200	1289	1205	4174	1-1/4	32	44	1-1/8	M30	305	

CLASS 300 DIMENSION

SIZE (in.)	L	D	D1	D2	D3	D4	W.T (kg)	HOLE DIA. in	HOLE DIA. mm	STUD/BOLTING DETAILS NO.	DIA. in	DIA. mm	LENGTH RF	LENGTH RJ
													Unit: mm	
8	381	127	330	203	210	270	78	1	25	12	7/8	M24	155	175
10	445	146	387.5	254	266	324	115	1-1/8	29	16	1	M27	175	195
12	521	181	451	305	310	381	242	1-1/4	32	16	1-1/8	M30	185	205
14	584	222	514.5	350	355	413	360	1-1/4	32	20	1-1/8	M30	195	215
16	648	232	571.5	400	405	470	489	1-3/8	35	20	1-1/4	M33	205	225
18	711	264	628.5	450	455	533	558	1-3/8	35	24	1-1/4	M33	210	230
20	775	292	686	500	505	584	766	1-3/8	35	24	1-1/4	M33	215	230
24	914	318	813	600	608	692	1190	1-5/8	41	24	1-1/2	M39	250	265
30	991	368	921	735	740	845	1996	1-1/2	38	369	1-3/8	M36	290	
36	1172	483	1089	873	880	1010	2660	1-3/4	45	32	1-5/8	M42	325	
42	1334	568	1245	1035	1045	1168	5515	1-7/8	48	36	1-3/4	M45	360	
48	1511	629	1416	1179	1190	1327	6239	2	51	40	1-7/8	M48	400	

DUAL PLATES DOUBLE FLANGED CHECK VALVE

- Cast Steel Check Valve, Double Flanged Ends
- Dual Plates, Spring Loaded
- Horizontal or Vertical Lines
- Designed to API594, API6D

Face to Face	API594/API 6D
Wall Thickness	ASME B16.34
End Flange	NPS2~24: ASME B16.5*
Class	ASME/ANSI CL600

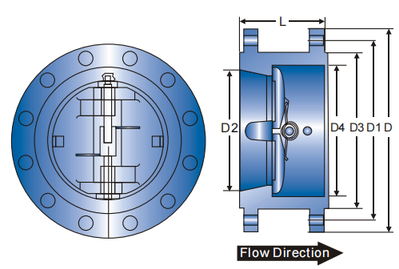

CLASS 600 DIMENSION

SIZE (in.)	L	D	D1	D2	D3	D4	W.T (kg)	HOLE DIA. in	HOLE DIA. mm	STUD/BOLTING DETAILS NO.	DIA. in	DIA. mm	LENGTH RF	LENGTH RJ
													Unit: mm	
8	165	419	349	200	270	212	134	1-1/4	32	12	1-1/8	M30	210	215
10	213	508	432	250	324	266	234	1-3/8	35	16	1-1/4	M33	230	235
12	229	559	489	305	381	312	304	1-3/8	35	20	1-1/4	M33	240	245
14	273	603	527	337	416	355	490	1-1/2	39	20	1-3/8	M36	260	265
16	305	686	603	387	470	400	680	1-5/8	41	20	1-1/2	M39	280	285
18	362	743	654	438	533	450	978	1-3/4	44	20	1-5/8	M42	295	300
20	368	813	724	489	584	500	1297	1-3/4	44	24	1-5/8	M42	310	315
24	438	940	838	591	692	600	1554	2	52	24	1-7/8	M48	350	360

* 26"and larger are available with ASME/ANSI B16.47 end flanges,either Style A or Style B (formerly MSS SP-44 and API 605).

FLANGED DUAL PLATE CHECK VALVE

- Cast Steel Check Valve, Double Flanged Ends
- Dual Plates, Spring Loaded
- Horizontal or Vertical Lines
- Designed to API594, API6D

Face to Face	API594/API 6D
Wall Thickness	ASME B16.34
End Flange	NPS2~24: ASME B16.5*
Class	ASME/ANSI CL900/1500

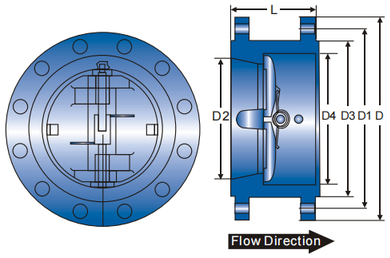

CLASS 900 DIMENSION

SIZE (in.)	L	D	D1	D2	D3	D4	W.T (kg)	HOLE DIA. in	HOLE DIA. mm	STUD/BOLTING DETAILS NO.	DIA. in	DIA. mm	LENGTH RF	LENGTH RJ
													Unit: mm	
8	206	470	393.7	200	270	212	217	1-1/2	39	12	1-3/8	M36	245	250
10	241	545	469.9	250	324	266	330	1-1/2	39	16	1-3/8	M36	260	265
12	292	610	533.4	305	381	312	509	1-1/2	39	20	1-3/8	M36	275	280
14	356	640	558.8	337	413	355	765	1-5/8	42	20	1-1/2	M39	295	305
16	384	705	615.9	387	470	400	890	1-3/4	45	20	1-5/8	M42	305	315
18	451	785	685.8	438	533	450	1450	2	51	20	1-7/8	M48	350	365
20	451	855	749.3	487	584	496	1960	2-1/8	54	20	2	M52	370	385
24	495	1040	901.7	591	692	600	2351	2-5/8	69	20	2-1/2	M64	470	490

CLASS 1500 DIMENSION

SIZE (in.)	L	D	D1	D2	D3	D4	W.T (kg)	HOLE DIA. in	HOLE DIA. mm	STUD/BOLTING DETAILS NO.	DIA. in	DIA. mm	LENGTH RF	LENGTH RJ
													Unit: mm	
8	206	483	393.7	200	270	212	283	1-3/4	45	12	1-5/8	M42	315	325
10	248	585	482.6	254	324	266	361	2	51	12	1-7/8	M48	365	375
12	305	675	571.5	305	381	312	637	2-1/8	54	16	2	M52	400	415
14	356	750	635	337	413	355	1097	2-3/8	61	16	2-1/4	M56	435	455
16	381	825	704.8	387	470	400	1152	2-5/8	67	16	2-1/2	M64	480	505

* 26"and larger are available with ASME/ANSI B16.47 end flanges,either Style A or Style B (formerly MSS SP-44 and API 605).

HUB ENDS DUAL PLATE CHECK VALVE

- Cast Steel Check Valve, Hub Ends
- Dual Plates, Spring Loaded
- Horizontal or Vertical Lines
- Designed to API594, API6D

Face to Face	API594/API 6D
Wall Thickness	ASME B16.34
End Flange	ASME B16.5*
Class	ASME/ANSI CL600~CL2500

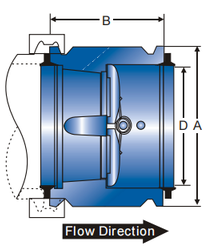

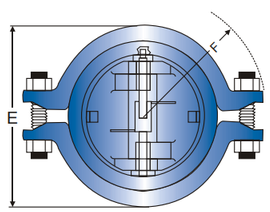

CLASS 600~2500 DIMENSION

SIZE (in.)	SEAT RING NO.	A	B	D	E	F	W.T (kg)
							Unit: inch
2	20	3.63	4.50	2.06	5.06	4.50	5
	14	3.63	4.50	1.16	5.06	4.50	5
3	27	5.00	4.50	3.06	6.88	5.25	9
	25	5.00	4.50	2.67	6.88	5.25	9
	20	5.00	4.50	2.06	6.88	5.25	9
4	40	6.00	5.00	2.06	8.13	6.00	11
	34	6.00	5.00	3.69	8.13	6.00	11
	31	6.00	5.00	3.25	8.13	6.00	11
	25	6.00	5.00	2.67	8.13	6.00	15
6	62	9.25	6.25	6.07	12.00	8.75	35
	52	9.25	6.25	5.31	12.00	8.75	35
	46	9.25	6.25	4.75	12.00	8.75	35
	40	9.25	6.25	4.06	12.00	8.75	40
8	82	11.50	8.13	8.25	14.50	9.88	72
	76	11.50	8.13	7.75	14.50	9.88	72
	72	11.50	8.13	7.25	14.50	9.88	72
	62	11.50	8.13	6.07	14.50	9.88	83
	52	11.50	8.13	5.31	14.50	9.88	83
10	H97	13.63	9.75	9.88	17.63	12.75	110
	H94	13.63	9.75	9.50	17.63	12.75	110
	H84	13.63	9.75	8.50	17.63	12.75	140
	H82X	13.63	9.75	8.25	18.25	13.50	140
	H72	13.63	9.75	7.25	18.25	12.75	140
	H62	13.63	9.75	6.07	18.25	12.75	157
	H62X	13.63	9.75	6.07	18.25	13.50	157
12	M120	16.00	12.50	12.00	20.25	14.50	177
	M112	16.00	12.50	11.25	20.25	14.50	177
	M102	16.00	12.50	10.25	20.25	14.50	228
	M82	16.00	12.50	8.25	20.25	14.50	268
	M82X	16.00	12.50	8.25	20.50	15.75	268

* 26"and larger are available with ASME/ANSI B16.47 end flanges,either Style A or Style B (formerly MSS SP-44 and API 605).

SINGLE DISC SWING WAFER CHECK VALVE

- Cast Steel Check Valve, Wafer Ends
- Single Disc, Spring Loaded
- Horizontal or Vertical Lines
- Designed to API594, API6D

Face to Face	API594/API 6D
Wall Thickness	ASME B16.34
End Flange	ASME B16.5
Class	ASME/ANSI CL150/300

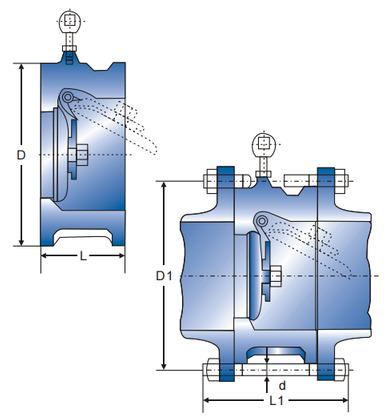

CLASS 150 DIMENSION

SIZE (in.)	L	D	W.T (kg)	P.C.D D1	NO.	STUD/BOLTING DETAILS DIA. in	DIA. mm	LENGTH RF	LENGTH RJ
									Unit: mm
2	60	103	3	120.5	4	5/8	M16	140	155
2-1/2	67	122	4	139.5	4	5/8	M16	150	165
3	73	135	5	152.5	4	5/8	M16	160	175
4	73	173	8	190.5	8	5/8	M16	170	185
5	86	195	10	216.0	8	3/4	M20	190	205
6	96	220	16	241.5	8	3/4	M20	205	220
8	127	277	30	298.5	8	3/4	M20	240	255
10	146	337	47	362.0	12	7/8	M24	270	285
12	181	407	65	432.0	12	7/8	M24	310	325
14	184	448	102	476.0	12	1	M27	325	340
16	191	512	137	540.0	16	1	M27	340	355
18	203	547	166	578.0	16	1-1/8	M30	365	380
20	219	604	193	635.0	20	1-1/8	M30	385	400
24	222	715	397	749.5	20	1-1/4	M33	405	420

CLASS 300 DIMENSION

SIZE (in.)	L	D	W.T (kg)	P.C.D D1	NO.	STUD/BOLTING DETAILS DIA. in	DIA. mm	LENGTH RF	LENGTH RJ
									Unit: mm
2	60	110	4	127.0	8	5/8	M16	155	175
2-1/2	67	128	5	149.0	8	3/4	M20	175	195
3	73	147	7	168.5	8	3/4	M20	190	210
4	73	179	10	200.0	8	3/4	M20	195	215
5	86	214	18	235.0	8	3/4	M20	215	235
6	98	249	22	270.0	12	3/4	M20	230	250
8	127	305	37	300.0	12	7/8	M24	280	300
10	146	359	61	387.5	16	1	M27	315	335
12	181	420	92	451.0	16	1-1/8	M30	365	385
14	222	483	140	514.5	20	1-1/8	M30	410	430
16	232	537	228	571.5	20	1-1/4	M33	435	455
18	264	594	240	628.5	24	1-1/4	M33	475	495
20	292	652	318	686.0	24	1-1/4	M33	510	535
24	318	772	492	813.0	24	1-1/2	M39	560	585

SINGLE DISC WAFER CHECK VALVE

- Cast Steel Check Valve, Wafer Ends
- Single Disc, Spring Loaded
- Horizontal or Vertical Lines
- Designed to EN Standard

Face to Face	EN Standard
Wall Thickness	ASME B16.34
End Flange	EN Standard
Class	PN10/16/25/40

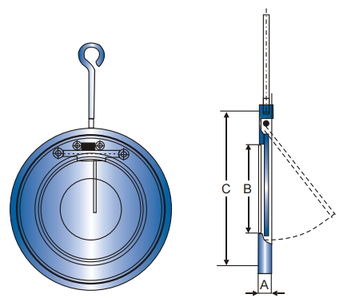

PN10 DIMENSION

SIZE DN	50	65	80	100	125	150	200	250	300	350	400	450	500	600
													Unit: mm	
A	19	19	19	19	19	19	29	29	38	44	51	60	64	70
B	25	38	46	72	95	114	144	188	220	266	305	356	406	485
C	108	128	142	162	192	218	273	328	380	438	489	539	594	696
W.T(kg)	1.2	1.6	2.2	2.7	3.8	5.8	14	17.5	27	41.5	60	74	116	178

PN16 DIMENSION

SIZE DN	50	65	80	100	125	150	200	250	300	350	400	450	500	600
													Unit: mm	
A	19	19	19	19	19	19	29	29	38	44	51	60	64	70
B	25	38	46	72	95	114	144	188	220	266	305	356	406	485
C	108	128	142	162	192	218	273	329	384	444	496	556	618	732
W.T(kg)	1.2	1.6	2.2	2.7	3.8	5.8	14	17.5	28	41.5	60	78	128	180

PN25 DIMENSION

SIZE DN	50	65	80	100	125	150	200	250	300	350	400	450	500	600
													Unit: mm	
A	19	19	19	19	19	22	29	38	51	51	51	76	83	83
B	25	38	46	72	95	114	144	188	220	266	305	356	406	485
C	108	128	142	168	194	224	284	341	401	458	515	565	622	732
W.T(kg)	1.9	2.3	2.6	3.4	4.4	6.4	16	21	38	53	68	103	150	205

PN40 DIMENSION

SIZE DN	50	65	80	100	125	150	200	250	300	350	400	450	500	600
													Unit: mm	
A	19	19	19	19	19	22	29	38	51	51	51	76	83	83
B	25	38	46	72	95	114	144	188	220	266	305	356	406	485
C	108	128	142	168	194	224	291	353	418	475	547	572	626	745
W.T(kg)	1.9	2.3	2.6	3.4	4.4	6.4	17	24	45	62	78	114	158	215

LIFT WAFER CHECK VALVE

- Cast Steel Check Valve, Wafer Ends
- Lift Type, Spring Loaded
- Horizontal or Vertical Lines
- Designed to API594, API6D

Face to Face	API594/API 6D
Wall Thickness	ASME B16.34
End Flange	ASME B16.5
Class	ASME/ANSI CL150

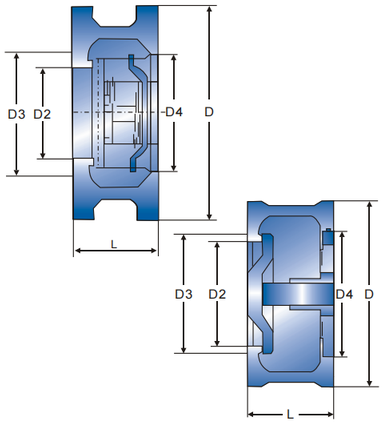

CLASS 150 DIMENSION

SIZE (in.)	L	D	D2	D3	D4	W.T (kg)	P.C.D D1	STUD/BOLTING DETAILS NO.	DIA. in	DIA. mm	LENGTH RF	LENGTH RJ
											Unit: mm	
1/2	25	46	15	25	25	0.28	60.5	4	1/2	M14	90	-
3/4	31.5	56	19	30	30	0.42	70	4	1/2	M14	100	-
1	35.5	65	24	36	36	0.56	79.5	4	1/2	M14	105	120
1-1/4	40	74	31	43	43	0.75	89	4	1/2	M14	115	130
1-1/2	45	84	39	52	52	1.3	98.5	4	1/2	M14	120	135
2	56	103	48	62	62	2.1	120.5	4	5/8	M16	140	155
2-1/2	63	122	62	75	75	2.8	139.5	4	5/8	M16	155	170
3	71	135	76	90	90	3.6	152.5	4	5/8	M16	165	180
4	80	173	95	112	112	4.8	190.5	8	5/8	M16	175	190
5	110	195	110	125	132	12	216.0	8	3/4	M20	210	225
6	125	220	127	150	158	17	241.5	8	3/4	M20	230	245
8	160	277	165	200	208	29	298.5	8	3/4	M20	270	285

LIFT WAFER CHECK VALVE

- Cast Steel Check Valve, Wafer Ends
- Lift Type, Spring Loaded
- Horizontal or Vertical Lines
- Designed to API594, API6D

Face to Face	API594/API 6D
Wall Thickness	ASME B16.34
End Flange	ASME B16.5
Class	ASME/ANSI CL300

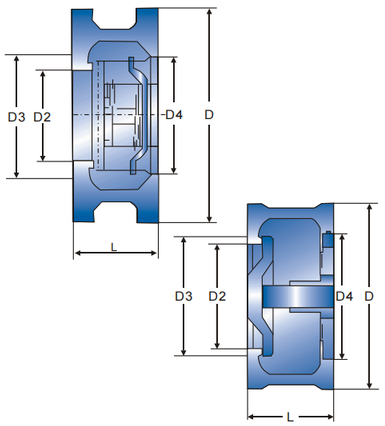

CLASS 300 DIMENSION

SIZE (in.)	L	D	D2	D3	D4	W.T (kg)	P.C.D D1	STUD/BOLTING DETAILS NO.	DIA. in	DIA. mm	LENGTH RF	LENGTH RJ
											Unit: mm	
1/2"	25	52	15	25	25	0.3	66.5	4	1/2	M14	95	105
3/4	31.5	65	19	30	30	0.46	82.5	4	5/8	M16	110	125
1	35.5	72	24	36	36	0.6	89	4	5/8	M16	115	130
1-1/4	40	81	31	43	43	0.8	98.5	4	5/8	M16	125	140
1-1/2	45	94	39	52	52	1.5	114.5	4	3/4	M20	140	155
2	56	110	48	62	62	2.4	127.0	8	5/8	M16	145	170
2-1/2	63	128	62	75	75	3	149.0	8	3/4	M20	170	190
3	71	147	76	91	91	4	168.5	8	3/4	M20	185	205
4	80	179	95	112	112	5.5	200.0	8	3/4	M20	200	220
5	110	214	110	125	132	13	235.0	8	3/4	M20	235	255
6	125	249	127	150	158	22	270.0	12	3/4	M20	255	275
8	160	305	165	200	208	36	330.0	12	7/8	M24	305	325

STANDARD DESIGN FEATURES OF DBV PRESSURE SEAL VALVES

DBV PressureSeal valves areintended for highpressure, high temperature applications inall types offluid except where severe coking isa factor.The design andmaterial selections provide excellent servicein steam-generation stations,industrial chemical plants andthermal power plants.

Most Pressure Sealvalves are offeredin Cast Steeland Forged Steel body designs.These options makethe DBVPressure Seal product line anexcellent choice forusers with variousapplication requirements.

DBV PressureSeal valves providethe most efficientflow passage and sealing featurespossible, resulting insignificant weight savings, easyinstallation and in-linemaintenance.

GENERAL DESIGN SPECIFICATIONS

DBV PressureSeal Valvesare manufactured andtested in strict accordance with thefollowing standards:

*ASME B16.34 *ASME B16.10 *ASME B16.25 *API 598

STANDARD CONSTRUCTION FEATURES

BODY

Flow areas arespecifically designed forminimum turbulence and pressure drop.

BONNET

Ample stuffing boxarea, Stellite stemguide surface andback seat shoulder foraccurate guiding ofthe stem andback seat.

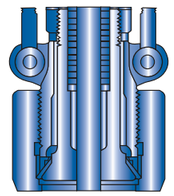

Bonnet Type A

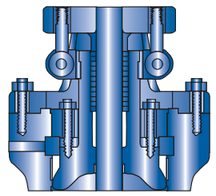

Bonnet Type B

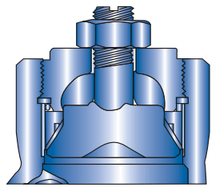

Bonnet Type C

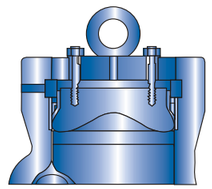

Bonnet Type D

Gate
Class 600, 900, 1500 & 2500
Size 4" andsmaller

Globe
Class 600, 900& 1500
Size 4" andsmaller

Class 2500
Size 3" andsmaller

Gate
Class 600, 900, 1500 & 2500
Size 6" andlarger

Globe
Class 600, 900& 1500
Size 6" andlarger

Class 2500
Size 4" andlarger

Swing Check
Class 600, 900& 1500
Size 4" andsmaller

Class 2500
Size 3" andsmaller

Swing Check
Class 600, 900& 1500
Size 6" andlarger

Class 2500
Size 4" andlarger

BALL BEARING-TYPEYOKE SLEEVE

Large, high-pressure valvescan require atremendous amount of torque toopen and close.By utilizing ballbearings in the yoke sleeve, theoperating torques ofthese difficult-to-operate valves are reducedby as muchas 50 percent.

Hammer blow wheelsare furnished onsizes 6" andlarger globe valves.

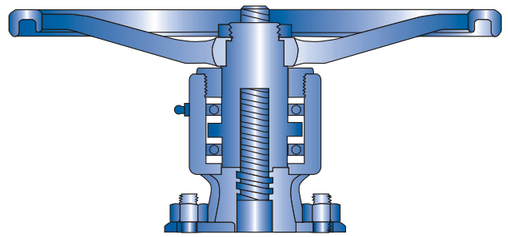

YOKE SLEEVE BALLBEARING-TYPE EQUIPPED VALVES

Class	Gate	Globe
600	Size 6" andlarger	Size 6" and larger
900	Size 2", 21/2" and 6" andlarger	Size 6" and larger
1500	Size 2" andlarger	Size 6" and larger
2500	Size 2" andlarger	Size 3" and larger

STANDARD CONSTRUCTION FEATURES

FLEXIBLE WEDGE SEALING DESIGN (GATE VALVES)

The flexible wedgeis a one-piece,fully guided castwedge with a central hubto allow theseating faces tomove relative toeach other, thuscompensating for distortionof the bodyseats due to thermal expansion orpiping loads. Seatring and wedgeseating face are setat a 9° angle from verticalto minimize slidingcontact of the wedgeand seat ringduring opening andclosing. Wedging actions helpeffect a tightseal in lowdifferential pressure services. Flexible wedgeconstruction resists wedgesticking or binding inservices where thevalve may beclosed when cold and opened whenhot. Seating surfacesare hardfaced with Stellite to providehigh cycle capabilityin very highdifferential pressure services.

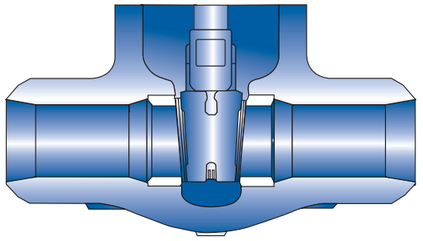

PARALLEL SLIDE DESIGN (GATE VALVES)

The gate isa split designusing two discsspring loaded and held together bya gate holderwith an Inconel750 spring to provide initial energizingwhen closed. Thegate relies forseat tightness on theprimary fluid pressureacting on thedownstream half. There isno wedging actionor extra loadingon the seats resultingin considerably loweroperating torque. When the valveis in theopen position thegate is completely clear of theseats. During closingthere is abevel on thebottom of the gateto guide itin between theseats and recompress the spring. Seatingsurfaces are hardfacedwith Stellite to provide high cyclecapability in veryhigh differential pressure services.

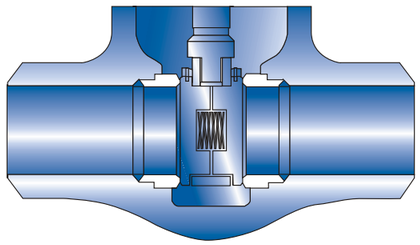

STRAIGHT AND Y-PATTERN SEATING DESIGN (GLOBE VALVES)

All DBVglobe valves utilizethe same seatingdesign which consist of guideddisc which sealsfully with theseat to provide an effective tightseal. Seating surfacesare hardfaced with Stellite to increase the cyclelife.

All DBVglobe valves areunidirectional. Anon-return stop check feature isavailable on request.

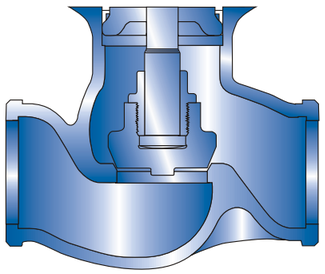

ENGINEERING AND DESIGN OPTIONS

Live Loading Options
(Gate & GlobeValves)

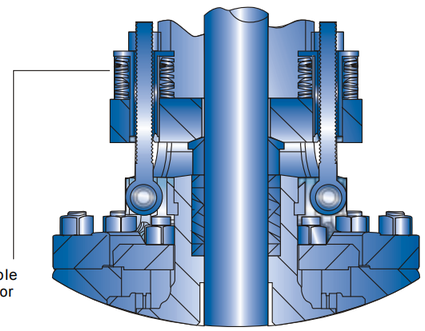

Live loading extends low emmision service life especially inservice in high pressure and temperatureconditions, Frequent Cyclingor where it is desirable to elimate theneed for occationaladjustment of the packing to compensatefor the viriations duringoperation

STANDARD CONSTRUCTION FEATURES

SWING CHECK AND TILT DISC (CHECK VALVES)

Pressure Seal checkvalves are designedfor reliability inhigh velocity service applicationsto prevent backflow. The check valves are designedto operate ineither vertical orhorizontal pipe runs. Seatingsurfaces are hardfacedwith Stellite to provide high cyclecapability.
The swing checkdesign offers betterflow characteristics than a tiltingdisc design withhigher flow area. The tilting disc is anon-slam design whichminimizes the potentialfor water hammer.
Pressure Seal tiltingcheck valves featurea fitted discthat's guided to ensurean effective tightseal and tominimize vibration.

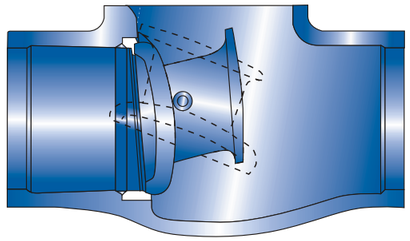

Tilt Disc Checkvalve

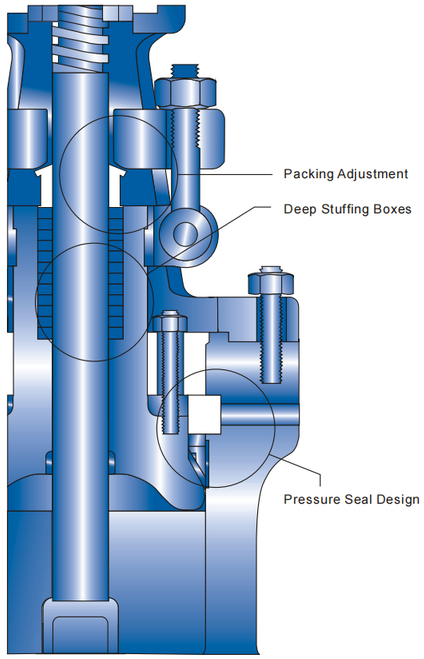

SPECIAL FEATURES OF ALL PRESSURE SEAL GATE AND GLOBE VALVES

PACKING ADJUSTMENT

All gate andglobe valves areprovided with atwo-piece packing gland to minimizethe possibility ofscoring the stemif the gland is tightenedunevenly. Eyeboltsremain fastened tothe bonnet. The eyeboltsswing out ofthe way tosimplify packing replacement, and areoriented so theycan be adjustedfrom one side ofthe valve.

DEEP STUFFING BOXES

Deep stuffing boxesare standard ongate and globevalves. The design providesextra packing fora more reliablestem seal, or sufficientdepth for packingwith an optionallantern ring in themiddle. When equippedwith a lanternring, a tapped and pluggedhole is provided;when specified, itcan be fitted withan injection fitting.

PRESSURE SEAL DESIGN

The segmental thrustring absorbs allthe thrust appliedby internal pressure.A hardenedStainless Steel protectivering prevents deformation ofthe top surfaceof the softsteel, 304 Stainless or 316Stainless with ahigh density graphitegasket. The gasket canbe removed freelywithoutdamagingthe sealing surface of thebody.

A singlewarranty then appliesto each modifiedproduct, with each productinspected for qualityand conformance to our customer's specificationsand industry standards.

AVAILABLE MODIFICATIONS FOR DBV PRESSURE SEAL VALVES

- Gear Operator Mounting
- Trim Changes
- Actuation
- Cryogenic Gas Columns
- Hand Wheel Extensions
- Drilled & Tapped Body/Bonnet Connections
- By-Pass
- Pressure Equalizing
- Acid Shields
- Oxygen & ChlorineCleaning & Packaging
- Weld End Bore Changes
- Customer Specified Coatings
- Outside Lever and Weight for Check Valves
- Slam Retarders forCheck Valves
- Chain Wheel Operator

NDE TESTING AVAILABLE

- Dye Penetrant Test
- Magnetic Particle Test
- Radiography
- PMI (Positive Material Identification)
- API/ANSI Performance Testing

PRESSURE SEAL GATE VALVES, CAST STEEL FLEXIBLE TAPER WEDGE DESIGN

PARTS AND MATERIALS CLASS 600, 900, 1500 & 2500

Item	Part Name	WCB	WC6	WC9	C5	C12	CF8M
1	Body	A216-WCB	A217-WC6	A217-WC9	A217-C5	A217-C12	A351-CF8M
2	Bonnet	A216-WCB	A217-WC6	A217-WC9	A217-C5	A217-C12	A351-CF8M
3	Wedge	A216-WCB+HF	A217-WC6+HF	A217-WC9+HF	A217-C5+HF	A217-C12+HF	A351-CF8M+HF
4	Stem	A479-410	A479 410	A479 410	A479 410	A479 410	A479 316
5	Handwheel	A197 or WCB	A197 or WCB	A197 or WCB	A197 or WCB	A197 or WCB	A197 or WCB
6	Body seat Ring	C/S 1020+HF	A182 F11+HF	A182 F22+HF	A182 F5a+HF	A182 F9+HF	240 316+HF
7	Backseat	A216-WCB+13Cr	A217-WC6+13Cr	A217-WC9+13Cr	A217-C5+13Cr	A217-C12+13Cr	A351-CF8M
8	Gasket	Soft Steel	304SS	304 SS	304 SS	304 SS	304 SS
9	Packing	Graphite	Graphite	Graphite	Graphite	Graphite	Graphite
10	Gland Flange	A283 D	A283 D	A283 D	A283 D	A283 D	A351-CF8
11	Gland Bolt	A307 B	A307 B	A307 B	A307 B	A307 B	A193 B8
12	Gland Nut	A307 B	A307 B	A307 B	A307 B	A307 B	A194 8
13	Hinge Clamp Bolt	A193 B7	A193 B7	A193 B7	A193 B7	A193 B7	A193 B7
14	Packing Gland	C/S 1020+Cr	A479 410	A479 410	A479 410	A479 410	A479 316
15	Bonnet Bolt	A193 B7	A193 B16	A193 B16	A193 B16	A193 B16	A193 B8
16	Bonnet Nut	A194 2H	A194 4	A194 4	A194 4	A194 4	A194 8
17	Yoke Cap	C/S 1020	C/S 1020	C/S 1020	C/S 1020	C/S 1020	C/S 1020+Zn
18	Yock Sleeve	A439 D2	A439 D2	A439 D2	A439 D2	A439 D2	A439 D2
19	Handle Nut	C/S 1020	C/S 1020	C/S 1020	C/S 1020	C/S 1020	C/S 1020+Zn
20	Set Screw	C/S 1020	C/S 1020	C/S 1020	C/S 1020	C/S 1020	C/S 1020
21	Grease Nipple	Steel	Steel	Steel	Steel	Steel	Steel
22	Bearing	Steel	Steel	Steel	Steel	Steel	Steel
23	Yoke	A216-WCB	A216-WCB	A216-WCB	A216-WCB	A216-WCB	A351-CF8
24	Yoke Bolt	A193 B7	A193 B7	A193 B7	A193 B7	A193 B7	A193 B8
25	Yoke Nut	A194 2H	A194 2H	A194 2H	A194 2H	A194 2H	A194 8
27	Bonnet Clamp	C/S 1045	C/S 1045	C/S 1045	C/S 1045	C/S 1045	A240 304
28	Retainer	C/S 1045+Cr	A240 304	A240 304	A240 304	A240 304	A240 316
29	Adopter Ring	C/S 1045+Cr	A240 304	A240 304	A240 304	A240 304	A240 316
31	Bonnet Clamp	C/S 1045	C/S 1045	C/S 1045	C/S 1045	C/S 1045	A240 304
32	Washer	A479 410	A479 410	A479 410	A479 410	A479 410	A240 304
33	Hinge Clamp	A216-WCB	A216-WCB	A216-WCB	A216-WCB	A216-WCB	A351-CF8

PRESSURE SEALED GATE VALVE

- Cast Steel Gate Valve, Outside Screw and York,
- Pressure Sealed, Rising Stem, Flexible Wedge
- "T" Head Stem
- Designed to ASME B16.34, API 600

Face to Face	ASME/ANSI B16.10
End Flange	ASME/ANSI B16.5
Buttweld	ASME/ANSI B16.25
Class	ASME/ANSI CL600~CL2500

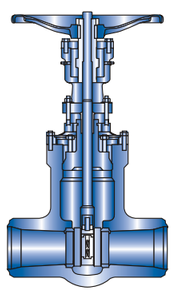

PARALLEL WEDGE GATE VALVE (OPTIONAL)

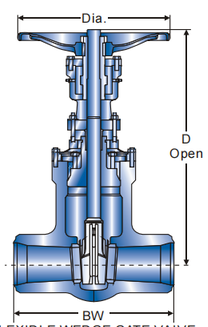

FLEXIDLE WEDGE GATE VALVE

CLASS 600 DIMENSION

Unit: inch

SIZE(in.)	2-1/2	3	4	6	8	10	12	14	16	18	20	24
A	8.50	10.00	12.00	18.00	23.00	28.00	32.0	35.00	39.00	43.00	47.00	55.00
B	24	24	28	35	46	51	58	64	73	80	90	98
E	10	10	14	14	20	24	30	30	34	34	34	38
W.T(lbs)	71	75	145	295	535	905	1450	2120	2730	3200	4480	5432

CLASS 900 DIMENSION

Unit: inch

SIZE(in.)	2	2-1/2	3	4	6	8	10	12	14	16	18	20	24
A	8.50	10.00	12.00	14.00	20.00	26.00	31.00	36.00	39.00	43.00	48.00	52.00	55.00
B	23	24	24	29	38	52	56	63	70	78	85	94	105
E	10	10	10	18	18	20	24	30	30IHW	30IHW	30IHW	30IHW	38IHW
W.T(lbs)	75	95	105	175	522	880	1270	1890	2630	3250	3985	5880	7925

CLASS 1500 DIMENSION

Unit: inch

SIZE(in.)	2	2-1/2	3	4	6	8	10	12	14	16	18	20	24
A	8.50	10.00	12.00	16.00	22.00	28.00	34.00	39.00	42.00	47.00	53.00	58.00	58.00
B	23	24	24	29	39	53.50	58	65.50	73	80	87	95	105.5
E	10	10	10	18	18	20	30	30IHV	30IHW	30IHW	30IHW	30IHW	38IHW
W.T(lbs)	75	95	115	185	585	880	1905	3115	41.00	4850	6450	8820	11885

CLASS 2500 DIMENSION

Unit: inch

SIZE(in.)	2-1/2	3	4	6	8	10	12	14	16	18	20	24
A	13.00	14.50	18.00	24.00	30.00	36.00	41.00	44.00	49.00	55.00	62.00	66.00
B	26	26	31	39	53	60	66	75	85	95	105	115
E	18	18	20	20	30	30IHV	30IHW	30IHW	38IHW	38IHW	38IHW	38IHW
W.T(lbs)	150	150	260	750	1250	2380	3650	4980	7275	8800	10585	13500

|H.W: IMPACTOR HANDWHEEL

PRESSURE SEAL CAST STEEL GLOBE VALVES

PARTS AND MATERIALS .CLASS 600, 900, 1500 & 2500

Item	Part Name	WCB	WC6	WC9	C5	C12	CF8M
1	Body	A216-WCB	A217-WC6	A217-WC9	A217-C5	A217-C12	A351-CF8M
2	Bonnet	A216-WCB	A217-WC6	A217-WC9	A217-C5	A217-C12	A351-CF8M
3	Disc	A216-WCB+HF	A217-WC6+HF	A217-WC9+HF	A217-C5+HF	A217-C12+HF	A351-CF8M+HF
4	Stem	A479 410	A479 410	A479 410	A479 410	A479 410	A479 316
5	Handwheel	A197 or WCB	A197 or WCB	A197 or WCB	A197 or WCB	A197 or WCB	A197 or WCB
6	Body seat Ring	A216-WCB+HF	A217-WC6+HF	A217-WC9+HF	A217-C5+HF	A217-C12+HF	A351-CF8M+HF
7	Backseat	A216-WCB+13Cr	A217-WC6+13Cr	A217-WC9+13Cr	A217-C5+13Cr	A217-C12+13Cr	A351-CF8M
8	Gasket	Soft Steel	304 SS	304 SS	304 SS	304 SS	316 SS
9	Packing	Graphite	Graphite	Graphite	Graphite	Graphite	Graphite
10	Gland Flange	A283 D	A283 D	A283 D	A283 D	A283 D	A351 B8
11	Gland Bolt	A307 B	A307 B	A307 B	A307 B	A307 B	A193 B8
12	Gland Nut	A307 B	A307 B	A307 B	A307 B	A307 B	A193 8
13	Packing Gland	C/S 1020+Cr	A479 410	A479 410	A479 410	A479 410	A479 316
14	Bonnet Bolt	A193 B7	A193 B16	A193 B16	A193 B16	A193 B16	A193 B8
16	Bonnet Nut	A194 2H	A194 4	A194 4	A194 4	A194 4	A194 8
17	Yoke Cap	C/S 1020	C/S 1020	C/S 1020	C/S 1020	C/S 1020	C/S 1020+Cr
18	Yock Sleeve	A439 D2	A439 D2	A439 D2	A439 D2	A439 D2	A439 D2
19	Lock Nut	A479 410	A479 410	A479 410	A479 410	A479 410	A479 316
20	Disc Thrust Pad	A479 410	A479 410	A479 410	A479 410	A479 410	A479 410
21	Yoke	A216-WCB	A216-WCB	A216-WCB	A216-WCB	A216-WCB	A351-WCB
22*	Yoke Bolt	A193 B7	A193 B7	A193 B7	A193 B7	A193 B7	A193 B7
23*	Yoke Bolt Nut	A194 2H	A194 2H	A194 2H	A194 2H	A194 2H	A194 8
25*	Bonnet Clamp	C/S 1045	C/S 1045	C/S 1045	C/S 1045	C/S 1045	A240 304
26	Retainer	C/S 1045+Cr	A240 304	A204 304	A240 304	A240 304	A240 316
27	Adopter Ring	C/S 1045+Cr	C/S 1045	A204 304	A240 304	A240 304	A240 316
30	Handle Nut	C/S 1020	C/S 1020	C/S 1020	C/S 1020	C/S 1020	C/S 1020+Zn
34	Grease Nipple	Steel	Steel	Steel	Steel	Steel	Steel
35	Stopper	A216-WCB	A216-WCB	A216-WCB	A216-WCB	A216-WCB	A351-CF8
36	Stopper Bolt	A307 B	A307 B	A307 B	A307 B	A307 B	A193 B8
38	Set Screw	C/S 1020	C/S 1020	C/S 1020	C/S 1020	C/S 1020	C/S 1020
39	Bearing	Steel	Steel	Steel	Steel	Steel	Steel
40**	Bonnet Clamp	C/S 1045	C/S 1045	C/S 1045	C/S 1045	C/S 1045	A240 304
41**	Washer	A479 410	A479 410	A479 410	A479 410	A479 410	A479 316
42	Hinge Clamp	A216-WCB	A216-WCB	A216-WCB	A216-WCB	A216-WCB	A351-CF8
44	Gland Clamp Bolt	A307 B	A307 B	A307 B	A307 B	A307 B	A193 B8
45	Gland Clamp Nut	A307 B	A307 B	A307 B	A307 B	A307 B	A194 8

*6" and above. **4" and below. Note: HF reflects hardfaced with Stellite. For other materials, contact your salesperson.

PRESSURE SEALED GLOBE VALVE

- Cast Steel Globe Valve, Outside Screw and York,
- Pressure Sealed, Rising Stem, Plug Disc
- Designed to ASME B16.34

Face to Face	ASME/ANSI B16.10
End Flange	ASME/ANSI B16.5
Buttweld	ASME/ANSI B16.25
Class	ASME/ANSI CL600~CL2500

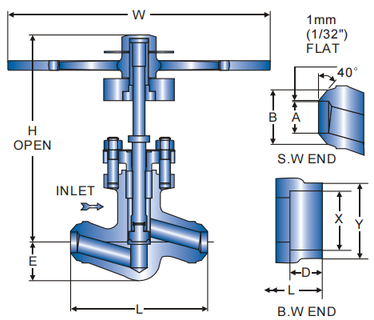

CLASS 600~2500 DIMENSION

BUTT WELD END

Unit: inch

SIZE (in.)	A	B	L	H	E	W	W.T(lbs)
1/2	0.500	1.125	5.50	8.750	1.50	6	11
3/4	0.781	1.375	5.50	8.750	1.50	6	11
1	1.000	1.656	7.875	13.250	2.375	13	29
1 1/4	1.250	2.250	7.875	13.250	2.375	13	29
1 1/2	1.500	2.625	9.875	14.750	2.750	21	44
2	1.844	3.375	11.812	16.500	3.563	26.750	110

CLASS 600~2500 DIMENSION

SOCKET WELD END

Unit: inch

SIZE (in.)	X	Y	L	H	E	W	W.T(lbs)
1/2	1.750	0.855	5.50	8.750	1.50	6	11
3/4	1.750	1.065	5.50	8.750	1.50	6	11
1	2.562	1.330	7.875	13.250	2.375	13	29
1 1/4	2.562	1.675	7.875	13.250	2.375	13	29
1 1/2	2.937	1.915	9.875	14.750	2.750	21	44
2	4.125	2.406	11.812	16.500	3.563	26.750	110

PRESSURE SEALED GLOBE VALVE

- Cast Steel Globe Valve, Outside Screw and York,
- Pressure Sealed, Rising Stem, Plug Disc
- Designed to ASME B16.34

Face to Face	ASME/ANSI B16.10
End Flange	ASME/ANSI B16.5
Buttweld	ASME/ANSI B16.25
Class	ASME/ANSI CL600~CL2500

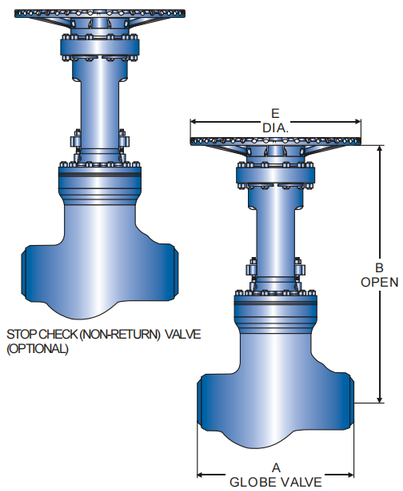

CLASS 600 DIMENSION

Unit: inch

SIZE(in.)	2-1/2	3	4	6	8	10	12	14	16	18	20	24
A	8.50	10.00	12.00	18.00	23.00	28.00	32.0	35.00	39.00	43.00	47.00	55.00
B	23	25	28	33.50	44	49	53	62	70	78	85	98
E	12	12	14	18	20	24	30	30	34	34	38	30IHW
W.T(lbs)	71	75	135	285	520	885	1425	1780	2640	3100	4200	5200

CLASS 900 DIMENSION

Unit: inch

SIZE(in.)	2	2-1/2	3	4	6	8	10	12	14	16	18	20	24
A	8.50	10.00	12.00	14.00	20.00	26.00	31.00	36.00	39.00	43.00	48.00	52.00	55.00
B	23	24	28	31	37	46	51	55	65	76	80	88	95
E	12	14	14	18	20	24	30	30IHW	30IHW	30IHW	38IHW	38IHW	38IHW
W.T(lbs)	70	95	105	160	430	850	1200	1850	2625	3130	3800	4600	6400

CLASS 1500 DIMENSION

Unit: inch

SIZE(in.)	2	2-1/2	3	4	6	8	10	12	14	16	18	20	24
A	8.50	10.00	12.00	16.00	22.00	28.00	34.00	39.00	42.00	47.00	53.00	58.00	58.00
B	23	24	28	31	37	47	52	58	65	75	80	88	95
E	12	14	14	18	20	24	30	30IHV	30IHW	38IHW	38IHW	38IHW	38IHW
W.T(lbs)	70	95	105	160	450	880	1750	2650	38.00	4730	5800	7900	10200

CLASS 2500 DIMENSION

Unit: inch

SIZE(in.)	2	2-1/2	3	4	6	8	10	12	14	16	18	20	24
A	11	13.00	14.50	18.00	24.00	30.00	36.00	41.00	44.00	49.00	55.00	58.00	58.00
B	24	26	26	33	39	51	53	61	70	79	87	96	105
E	14	18	18	20	24	30	30IHV	30IHW	30IHW	38IHW	38IHW	38IHW	38IHW
W.T(lbs)	130	140	150	235	530	1150	1980	3140	4730	6650	7400	9800	12900

|H.W: IMPACTOR HANDWHEEL

Y PATTERN PRESSURE SEALED GLOBE VALVE

- Cast Steel Globe Valve, Y Pattern,
- Outside Screw and York, Rising Stem
- Pressure Sealed, , Plug Disc
- Designed to ASME B16.34, BS1873

Face to Face	ASME/ANSI B16.10
End Flange	ASME/ANSI B16.5
Buttweld	ASME/ANSI B16.25
Class	ASME/ANSI CL900~CL2500

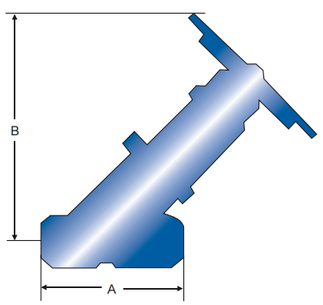

CLASS 900/1500 DIMENSION

Unit:inch

SIZE (in.)	2-1/2	3	4	6	8	10	12	14	16	18	20	24
A	14.50	14.50	16.00	27.75	30.00	36.25	43.00	43.00	54.00	58.00	55.00	59.50
B	25.25	25.25	25.25	37.00	46.00	50.00	60.00	60.00	74.00	74.00	78.00	95.00
W.T (lbs)	225	225	275	800	1750	2375	3375	3375	7500	7500	10000	13600

CLASS 2500 DIMENSION

Unit:inch

SIZE (in.)	2-1/2	3	4	6	8	10	12	14	16	18	20
A	14.50	14.50	18.00	24.00	30.00	36.00	41.00	48.75	48.75	58.00	58.00
B	25.25	25.25	25.25	39.00	45.00	50.00	55.00	55.00	61.00	78.00	78.00
W.T (lbs)	225	225	275	935	1800	3000	5100	5100	7000	12000	12000

PRESSURE SEAL CAST STEEL CHECK VALVES

PARTS AND MATERIALS . CLASS 600, 900, 1500 & 2500

Item	Part Name	WCB	WC6	WC9	C5	C12	CF8M
1	Body	A216-WCB	A217-WC6	A217-WC9	A217-C5	A217-C12	A351-CF8M
2	Bonnet	A216-WCB	A217-WC6	A217-WC9	A217-C5	A217-C12	A351-CF8M
3	Disc	A216-WCB+HF	A217-WC6+HF	A217-WC9+HF	A217-C5+HF	A217-C12+HF	A351-CF8M+HF
4	Arm	A479-410	A217 WC6	A217 WC9	A217 C5	A217 C12	A351 CF8M
5	Rod Pin	A395	A479 410	A479 410	A479 410	A479 410	A479 316
6	Body Seat Ring	C/S	A182 F11+HF	A182 F22+HF	A182 F5a+HF	A182 F9+HF	A240 316+HF
7	Plug Bolt	A479 410	A479 304	A479 304	A479 304	A479 304	A479 316
8	Gasket	Soft Steel	304 SS	304 SS	304 SS	304 SS	316 SS
9	Plug Gasket	Soft Steel	304 SS	304 SS	304 SS	304 SS	316 SS
10	Bonnet Bolt	A193 B7	A193 B16	A193 B16	A193 B16	A193 B16	A193 B8
11	Bonnet Nut	A194 2H	A194 4	A194 4	A194 4	A194 4	A194 8
12	Disc Nut	A194 8	A194 8	A194 8	A194 8	A194 8	A194 8M
13	Split Pin	A580 304	A580 304	A580 304	A580 304	A580 304	A580 316
14	Washer	A240 304	A240 304	A240 304	A240 304	A240 304	A240 316
15	Bonnet Clamp	C/S 1045	C/S 1045	C/S 1045	C/S 1045	C/S 1045	A240 304
16	Retainer	C/S 1045+H.F	A240 304	A240 304	A240 304	A240 304	A240 316
17	Adapter Ring	C/S 1045+H.F	A240 304	A240 304	A240 304	A240 304	A240 316
18	Sealing Bolt	A479 410	A479 410	A479 410	A479 410	A479 410	A479 316
19	Sealing Nut	A194 2H	A194 2H	A194 2H	A194 2H	A194 2H	A194 8
20	Eye Bolt	A105	A105	A105	A105	A105	A105
21	Nut	A194 2H	A194 2H	A194 2H	A194 2H	A194 2H	A194 8
22	Washer	A283 D	A283 D	A283 D	A283 D	A283 D	A350 CF8

Other materials available upon request to meet specific service requirements.

PRESSURE SEALED SWING CHECK VALVE

- Cast Steel Check Valve Valve
- Swing Type, Pressure Sealed
- Horizontal or Vertical Lines
- Designed to API6D, BS1868

Face to Face	ASME/ANSI B16.10
End Flange	ASME/ANSI B16.5
Buttweld	ASME/ANSI B16.25
Class	ASME/ANSI CL900~CL2500

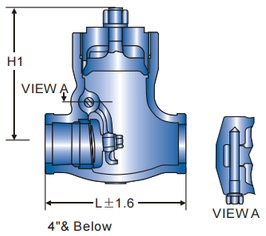

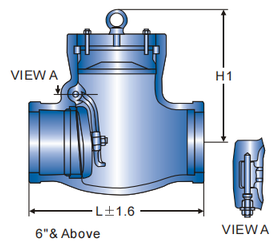

CLASS 600 DIMENSION

Unit:inch

SIZE (in.)	2	3	4	6	8	10	12	14	16	18	20	24
L	7.00	10.00	12.00	18.00	23.00	28.00	32.00	35.00	39.00	43.00	47.00	55.00
H	7.52	9.76	12.13	14.37	16.14	18.31	20.08	22.09	24.33	26.50	38.74	30.94
Cv	123	284	519	1243	2213	3397	5120	8384	8344	10508	13745	18751
W.T(lbs)	80	100	125	287	573	815	1081	1455	1874	2425	3285	4498

CLASS 900 DIMENSION

Unit:inch

SIZE (in.)	2	3	4	6	8	10	12	14	16	18	20	24
L	8.50	12.00	14.00	20.00	26.00	31.00	36.00	39.00	43.00	48.00	52.00	61.00
H	9.57	9.53	14.57	15.75	21.06	21.06	24.02	26.97	32.64	32.64	35.35	38.31
Cv	107	260	486	1142	2010	3138	4586	5565	9575	9575	11821	17023
W.T(lbs)	90	198	243	540	937	1521	2249	2690	2976	4079	5292	6395

CLASS 1500 DIMENSION

Unit:inch

SIZE (in.)	2	3	4	6	8	10	12	14	16	18	20	24
L	8.50	12.00	16.00	22.00	28.00	34.00	39.00	42.00	47.00	60.50	65.50	76.50
H	9.57	11.81	14.29	15.91	16.10	22.64	26.85	29.61	31.57	34.53	36.89	40.63
Cv	107	238	425	996	1751	2736	3988	4794	6268	8251	10344	14859
W.T(lbs)	90	154	254	551	1036	1632	2425	3110	3528	4630	5733	7718

CLASS 2500 DIMENSION

Unit:inch

SIZE (in.)	2	3	4	6	8	10	12	14	16	18	20	24
L	11.00	14.50	18.00	24.00	30.00	36.00	41.00	44.00	48.00	53.00	57.00	66.00
H	10.24	13.78	15.94	17.91	22.44	24.88	32.09	30.55	33.70	36.14	38.82	43.22
Cv	69	160	267	660	1182	1878	2756	3347	4382	5793	7035	10193
W.T(lbs)	110	187	364	1015	1985	2866	3969	5402	7056	8930		

PRESSURE SEALED PISTON CHECK VALVE

- Cast Steel Check Valve Valve
- Lift Piston, Pressure Sealed
- Horizontal or Vertical Lines
- Designed to API6D, BS1868

Face to Face	ASME/ANSI B16.10
End Flange	ASME/ANSI B16.5
Buttweld	ASME/ANSI B16.25
Class	ASME/ANSI CL600~CL2500

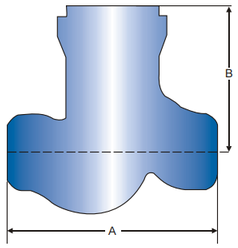

CLASS 600 DIMENSION

Unit: inch

SIZE(in.)	2-1/2	3	4	6	8	10	12	14	16	18	20	24
A	8.50	10.00	12.00	18.00	23.00	28.00	32.00	35.00	39.00	43.00	47.00	55.00
B	8.5	8.5	9.5	10.5	13	17	19	20	21.5	26	28	33
W.T(lbs)	71	75	125	260	490	780	1245	-	-	-	-	-

CLASS 900 DIMENSION

Unit: inch

SIZE(in.)	2-1/2	3	4	6	8	10	12	14	16	18	20	24
A	10.00	12.00	14.00	20.00	26.00	31.00	36.00	39.00	43.00	48.00	52.00	61.00
B	8	8	10	12	15	18	20	22	24	27	31	35
W.T(lbs)	85	90	155	370	685	1235	1780	-	-	-	-	-

CLASS 1500 DIMENSION

Unit: inch

SIZE(in.)	2-1/2	3	4	6	8	10	12	14	16	18	20	24
A	10.00	12.00	16.00	22.00	28.00	34.00	39.00	42.00	47.00	52.00	56.00	58.00
B	8	9	10	12	15	18	21	23	25	29	32	37
W.T(lbs)	85	90	160	380	720	1380	1975	-	-	-	-	-

CLASS 2500 DIMENSION

Unit: inch

SIZE(in.)	2-1/2	3	4	6	8	10	12	14	16	18	20	24
A	13.00	14.50	18.00	24.00	30.00	36.00	41.00	44.00	48.00	53.00	56.00	58.00
B	9.5	9.5	21.5	14	17	20	23	25.5	28	31	34	38
W.T(lbs)	120	125	190	480	830	1400	2320	-	-	-	-	-

PRESSURE SEALED Y PATTERN CHECK VALVE

- Cast Steel Check Valve Valve
- Lift Piston, Pressure Sealed
- Horizontal or Vertical Lines
- Designed to API6D, BS1868

Face to Face	ASME/ANSI B16.10
End Flange	ASME/ANSI B16.5
Buttweld	ASME/ANSI B16.25
Class	ASME/ANSI CL900~CL2500

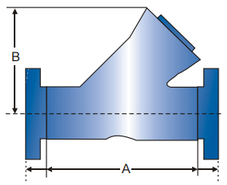

CLASS 900/1500 DIMENSION

Unit:inch

SIZE(in.)	2-1/2	2-1/2	4	6	8	10	12	14	16	18	20	24
A	14.50	14.50	16.00	27.75	30.00	36.25	43.00	43.00	54.00	58.00	55.00	59.50
B	10.50	10.50	10.50	16.00	20.75	25.50	29.75	39.75	40.25	43.00	43.25	48.00
W.T (lbs)	160	160	190	540	1240	1700	2400	2400	5300	5500	7200	9750

CLASS 2500 DIMENSION

Unit:inch

SIZE(in.)	2-1/2	3	4	6	8	10	12	14	16	18	20
A	14.50	14.50	18.00	24.00	30.00	36.00	41.00	48.75	48.75	58.00	58.00
B	10.50	10.50	10.50	16.00	20.75	25.50	29.75	34.75	34.50	43.00	37.38
W.T (lbs)	160	160	200	650	1300	2100	3300	3500	4850	8400	8700

FLOW COEFFICIENCY Cv

SIZE (in.)	2	2-1/2	3	4	6	8	10	12	14	16	18	20	24
CLASS 900/1500	80	90	110	120	650	1300	2050	2300	2800	4850	4850	6300	9000
CLASS 2500	80	90	110	110	490	870	1425	2050	2250	3000	3250	4850	6300

PRESSURE SEALED TILTING DISC CHECK VALVE

- Cast Steel Tilting Disc Check Valve
- Pressure Sealed
- Horizontal or Vertical Lines
- Designed to API6D, BS1868

Face to Face	ASME/ANSI B16.10
End Flange	ASME/ANSI B16.5
Buttweld	ASME/ANSI B16.25
Class	ASME/ANSI CL900~CL2500

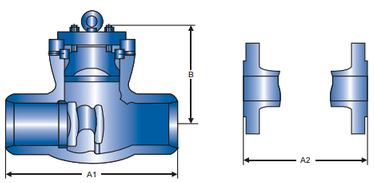

CLASS 900 DIMENSION

Unit:inch

SIZE(in.)	2	2-1/2	3	4	6	8	10	12	14	16
A1(B.W)	8.5	10	12	14	20	26	31	36	39	43
A2(R.F)	14.5	16.5	15	18	24	29	33	38	40.5	44.5
B	9	10.3	8.1	11	13.3	15.6	17.9	21.3	23	26
W.T RF	54	70	88	118	230	550	850	1220	1690	2710
(kg) BW	30	46	49	93	160	390	600	900	1200	1600

CLASS 1500 DIMENSION

Unit:inch

SIZE(in.)	2	2-1/2	3	4	6	8	10	12
A1(B.W)	8.5	10	12	16	22	28	34	39
A2(R.F)	14.5	16.5	18.5	21.5	27.75	32.75	39	44.5
B	9	10.3	8.1	11	13.3	15.6	17.9	21.3
W.T RF	54	70	105	178	392	600	980	1550
(kg) BW	30	46	65	135	280	480	780	1100

CLASS 2500 DIMENSION

Unit:inch

SIZE(in.)	2	2-1/2	3	4	6	8	10
A1(B.W)	11	13	14.5	18	24	30	36
A2(R.F)	17.75	20	22.75	26.5	36	40.25	50
B	9	10.3	10.6	11	13.5	19	22
W.T RF	85	115	155	265	585	985	1600
(kg) BW	58	70	85	145	330	780	1220

TYPICAL DBV FORGED STEEL GATE VALVE EXPANDED VIEW

1. Handwheel Nut: The handwheel nut secures the handwheel to the bonnet assembly.
2. Handwheel: The handwheel cycles the valve.
3. Stem Nut: The stem nut provides a precision guide for proper stem alignment.
4 & 11. Gland Bolts & Nuts: The gland bolt and nut allows for easy adjustments for packing compression.
5. Stuffing Box: The stuffing box contains the packing.
6. Bonnet Bolts: The bonnet bolts secure the bonnet to the body.
7. Yoke & Bonnet: DBV bonnet assemblies are built to the same standards as the bodies. Larger size gate valves utilize a multi-piece bonnet design.
8. Bonnet Gasket: The bonnet gasket creates a leakproof seal between the bonnet and body.
9. Body: DBV forged steel bodies provide low resistance flow and optimum strength and performance.
10. Seat Rings: To ensure a stable shutoff, seat rings are aligned and swaged into the valve, then precision ground for optimal seating.
12. Gland Flange: Applies pressure to the gland for accurate packing adjustments.
13. Gland: Compresses the packing to create a stem seal above the back seat, between the bonnet and stem.
14. Packing: The packing creates a seal above the back seat, between the bonnet and stem.
15. Stem: The stem is precision machined and inserts into the horizontal channel in the disc.
16. Wedge: DBV solid wedge is machined to the tightest tolerances to ensure troublefree shutoff and cycling.

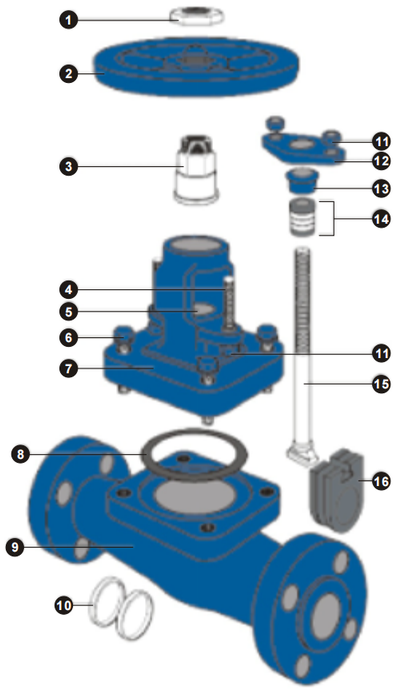

BOLTED, WELDED & UNION BONNET● CLASS 150, 300, 600, 800, 1500, & 2500

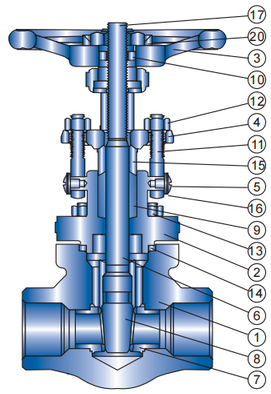

No.	Part	Material
1	Body	Carbon Steel, ASTM A105N
2	Bonnet	Carbon Steel, ASTM A105N
3	handwheel	Carbon Steel
4	Gland Flange	Carbon Steel, ASTM A105
5	Eyebolt Screws	Zinc Plated, Carbon Steel
6	Stem	Alloy Steel, ASTM A182 F6
7	Seats	Alloy Steel, ASTM A182 F6/Stellite 6
8	Wedge	Alloy Steel, ASTM A182 F6
9	Packing	Graphite Stack
10	Yoke Nut	Stainless Steel, AISI 416
11	Eyebolts	Stainless Steel, ASTM A193-B8
12	Eyebolt Nuts	Carbon Steel, ASTM A194 2HM
13	Cap Screws	Alloy Steel, ASTM A193 B7M
14	Gasket	316 SS Spiral Wound Grafoil
15	Packing Gland	Stainless Steel, AISI 416
16	Lock Nut Washer	Stainless Steel
17	Handwheel Nut	Carbon Steel
20	Name Plate	Stainless Steel

DBV FORGED VALVES ARE MANUFACTURED IN STRICT ACCORDANCE WITH THE FOLLOWING STANDARDS:

API602	Compact steel gate valves
API598	Valve Inspection and Test
ANSI/ASME B16.34	Steel valve, flanged and butt-welding end
ANSI/ASME B16.5	Steel pipe flanges and flanged fittings
ANSI/ASME B16.10	Face-to-face and end-to-end dimensions of ferrous valves
ANSI/ASME B 16.11	Forged steel fittings, socket welding and threaded
ANSI/ASME B 1.20.1	Pipe threads, general purpose
ANSI/ASME B31.3	Chemical plant and petroleum refinery piping
MSS-SP-25	Standard marking system for valves, fittings, flanges and unions
MSS-SP-6	Standard finishes for contact faces of pipe, flanges and connecting end flanges of valves and fittings
NACE MR-01-75	Material requirements: Sulfide stress cracking resistant metallic materials for oil field equipment.

FORGED STEEL GATE VALVE

- Forged Steel Gate Valve, Outside Screw and York,
- Bolted, Welded & Union Bonnet, Rising Stem
- Threaded, Socketed, Buttwelded Ends
- Conventional Ports
- Designed to API 602

Face to Face	DBV Standard
Pipe Threads, G.P	ASME B1.20.1
Threaded Ends	ASME B16.11
Buttweld	ASME B16.25
Class	ASME CL800~CL2500

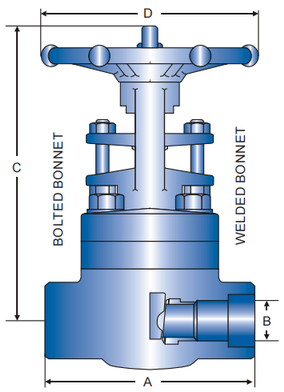

CLASS 800 DIMENSION
CLASS 800 WB

SIZE (in.)	A	B	C	D	W.T (lbs) Unit:inch
1/4	3.1	0.31	5.7	3.1	3.5
3/8	3.1	0.39	5.7	3.1	3.5
1/2	3.2	0.39	5.2	3.2	3.2
3/4	3.5	0.55	5.4	3.2	4.4
1	4.3	0.71	6.3	3.9	7.1
1-1/4	5.0	0.95	7.4	4.7	10.7
1-1/2	5.0	1.22	8.4	5.5	14.3
2	5.1	1.44	8.9	5.5	18.7
3	-	-	-	-	-

CLASS 800 DIMENSION
CLASS 800 BB

SIZE (in.)	A	B	C	D	W.T (lbs) Unit:inch
1/4	3.1	0.31	5.7	3.1	3.9
3/8	3.1	0.39	5.7	3.1	3.9
1/2	3.2	0.39	5.2	3.2	3.9
3/4	3.5	0.55	5.4	3.2	4.6
1	4.3	0.71	6.3	3.9	7.9
1-1/4	5.0	0.95	7.4	4.7	11.2
1-1/2	5.0	1.22	8.4	5.5	15.4
2	5.1	1.44	8.9	5.5	20.0
3	7.3	2.13	15.5	11.3	56

CLASS 1500 DIMENSION
CLASS 1500 WB

SIZE (in.)	A	B	C	D	W.T (lbs) Unit:inch
1/2	3.5	0.39	5.4	3.2	5.0
3/4	4.3	0.55	6.4	3.9	8.4
1	4.7	0.75	7.5	4.7	12.6
1-1/4	5.1	0.95	8.3	5.5	14.6
1-1/2	5.1	1.16	9	5.5	22.0
2	5.9	1.44	10.2	6.7	33.0

CLASS 1500 DIMENSION
CLASS 1500 BB

SIZE (in.)	A	B	C	D	W.T (lbs) Unit:inch
1/2	3.5	0.39	5.4	3.2	5.5
3/4	4.3	0.55	6.4	3.9	8.4
1	4.7	0.75	7.5	4.7	11.9
1-1/4	5.1	0.95	8.3	5.5	17.6
1-1/2	5.1	1.16	9	5.5	22.4
2	5.9	1.44	10.2	6.7	33.0

CLASS 2500 DIMENSION
CLASS 2500 WB

SIZE (in.)	A	B	C	D	W.T (lbs) Unit:inch
1/2	4.3	0.39	6.9	3.9	7.7
3/4	4.7	0.55	8.3	4.7	12.1
1	5.1	0.75	9.4	5.5	16.5
1-1/4	5.1	0.95	11.0	6.7	22
1-1/2	8.3	1.16	12.2	6.7	35.2
2	9.4	1.44	14	10.2	55

CLASS 2500 DIMENSION
CLASS 2500 BB

SIZE (in.)	A	B	C	D	W.T (lbs) Unit:inch
1/2	4.3	0.39	8.3	3.9	12.1
3/4	4.7	0.55	10.0	4.7	18.7
1	5.1	0.75	10.4	5.5	22.4
1-1/4	5.1	0.95	14.4	6.7	57.2
1-1/2	8.3	1.16	14.8	6.7	57.2
2	9.4	1.44	15.4	10.2	81.4

FORGED STEEL FLANGED GATE VALVE

- Forged Steel Gate Valve, Outside Screw and York,
- Bolted, Welded & Union Bonnet, Rising Stem
- Flangeded Ends, Conventional Ports
- Designed to API 602

Face to Face	ASME/ANSI B16.10
Pipe Threads, G.P	ASME B1.20.1
Threaded Ends	ASME B16.11
Buttweld	ASME B16.25
Class	ASME CL150~CL1500

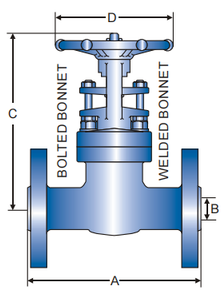

CLASS 150 DIMENSION
CLASS 150 BB & WB

SIZE (in.)	A	B	C	D	W.T (lbs) Unit:inch
1/2	4.3	0.39	6.3	3.2	6.8
3/4	4.6	0.55	6.5	3.2	8.6
1	5.0	0.71	7.2	4.0	12.1
1-1/4	5.5	0.94	7.7	4.8	18.1
1-1/2	6.5	1.22	8.3	5.5	23.4
2	7.0	1.44	9.8	5.5	32.0

CLASS 300 DIMENSION
CLASS 300 BB & WB

SIZE (in.)	A	B	C	D	W.T (lbs) Unit:inch
1/2	5.5	0.39	5.2	3.2	7.3
3/4	6.0	0.55	5.4	3.2	10.8
1	6.5	0.71	6.3	3.9	14.7
1-1/4	7.0	0.94	7.5	4.7	21.1
1-1/2	7.5	1.22	9.0	5.5	29.5
2	8.5	1.44	9.5	6.7	35.9

CLASS 600 DIMENSION
CLASS 600 BB & WB

SIZE (in.)	A	B	C	D	W.T (lbs) Unit:inch
1/2	6.5	0.39	7.0	3.2	7.7
3/4	7.5	0.55	7.3	3.2	11.7
1	8.5	0.71	6.3	4.0	15.7
1-1/4	9.0	0.94	9.8	5.5	30.9
1-1/2	9.5	1.22	10.0	5.5	30.9
2	11.5	1.44	11.0	5.6	40.8

CLASS 1500 DIMENSION
CLASS 1500 BB & WB

SIZE (in.)	A	B	C	D	W.T (lbs) Unit:inch
1/2	8.5	0.55	7.8	3.9	22
3/4	9	0.55	7.8	4.7	33
1	10	0.71	8.6	5.5	37.4
1-1/4	-	0.95	9.3	-	-
1-1/2	12	1.14	10.8	6.8	77
2	14.5	1.44	12.6	10.2	121

FORGED STEEL EXTENDED BODY GATE VALVE

- Forged Steel Gate Valve, Outside Screw and York,
- Bolted, Welded & Union Bonnet, Rising Stem
- Lip, Threaded, Contourea, Socket Weld Ends
- Extended Body, Conventional Ports
- Designed to API 602

Face to Face	DBV Standard
Pipe Threads, G.P	ASME B1.20.1
Threaded Ends	ASME B16.11
Buttweld	ASME B16.25
Class	ASME CL800

AVAILABLE ENDS

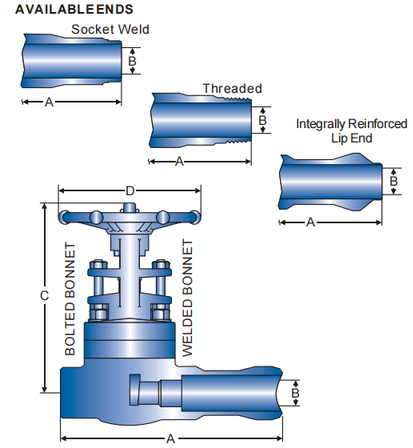

CLASS 800 DIMENSION
CLASS 800 IR CONTOURED END

SIZE (in.)	A	B	C	D	W.T (lbs) Unit:inch
1/2	8.6	0.39	5.9	3.2	6
3/4	8.6	0.55	6.1	3.2	7
1	9.6	0.71	7.3	3.9	10
1-1/2	10.4	1.14	10.2	5.5	19
2	11.4	1.44	10.8	5.5	29

CLASS 800 DIMENSION
CLASS 800 IR - LIP END

SIZE (in.)	A	B	C	D	W.T (lbs) Unit:inch
1/2	8.6	0.39	5.9	3.2	6
3/4	8.6	0.55	6.1	3.2	7
1	9.6	0.71	7.3	3.9	10
1-1/2	10.4	1.14	10.2	5.5	19
2	11.4	1.44	10.8	5.5	29

CLASS 800 DIMENSION
CLASS 800 THREADED

SIZE (in.)	A	B	C	D	W.T (lbs) Unit:inch
1/2	5.6	0.39	6.4	3.1	5.7
3/4	5.8	0.55	7.3	3.9	6.4
1	6.5	0.7	7.6	3.9	9.5
1-1/2	7.5	1.14	10	5.5	19.4
2	8.5	1.44	10.7	6.7	28.6

CLASS 800 DIMENSION
CLASS 800 SOCKET WELD

SIZE (in.)	A	B	C	D	W.T (lbs) Unit:inch
1/2	5.6	0.39	6.4	3.1	5.7
3/4	5.8	0.55	7.3	3.9	6.4
1	6.5	0.7	7.6	3.9	9.5
1-1/2	7.5	1.14	10	5.5	19.4
2	8.5	1.44	10.7	6.7	28.6

FORGED STEEL EXTENDED BODY GATE VALVE

- Forged Steel Gate Valve, Outside Screw and York,
- Bolted, Welded & Union Bonnet, Rising Stem
- Lip, Threaded, Contourea, Socket Weld Ends
- Extended Body, Conventional Ports
- Designed to API 602

Face to Face	DBV Standard
Pipe Threads, G.P	ASME B1.20.1
Threaded Ends	ASME B16.11
Buttweld	ASME B16.25
Class	ASME CL1500

AVAILABLE ENDS

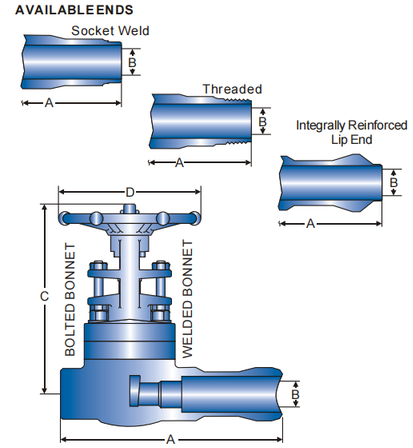

CLASS 1500 DIMENSION
CLASS 1500 RE-OUT-FORCED

SIZE (in.)	A	B	C	D	W.T (lbs) Unit:inch
1/2	8.6	0.39	5.4	3.2	6
3/4	9.6	0.55	6.3	3.9	10
1	10.4	0.75	8.6	4.7	15
1-1/2	10.5	1.16	9.4	5.5	25
2	12.8	1.44	10.9	6.7	35

CLASS 1500 DIMENSION
CLASS 1500 RE-IN FORCED

SIZE (in.)	A	B	C	D	W.T (lbs) Unit:inch
1/2	8.6	0.39	5.4	3.2	6
3/4	9.6	0.55	6.3	3.9	10
1	10.4	0.75	8.6	4.7	15
1-1/2	10.5	1.16	9.4	5.5	25
2	12.8	1.44	10.9	6.7	35

CLASS 1500 DIMENSION
CLASS 1500 THREADED

SIZE (in.)	A	B	C	D	W.T (lbs) Unit:inch
1/2	5.7	0.39	6.5	3.2	6.4
3/4	6.5	0.55	7.1	3.9	9.5
1	7.5	0.7	9.4	5.5	19.4
1-1/2	8.5	1.14	10.6	6.7	29.7
2	9.8	1.44	12.6	10.2	41.1

CLASS 1500 DIMENSION
CLASS 1500 SOCKET WELD

SIZE (in.)	A	B	C	D	W.T (lbs) Unit:inch
1/2	5.7	0.39	6.5	3.2	6.4
3/4	6.5	0.55	7.1	3.9	9.5
1	7.5	0.7	9.4	5.5	19.4
1-1/2	8.5	1.14	10.6	6.7	29.7
2	9.8	1.44	12.6	10.2	41.1

DBV FORGED STEEL GLOBE VALVE EXPANDED VIEW

1. Handwheel Nut:The handwheel nutsecures the handwheelto the bonnetassembly.
2. Handwheel Washer: The washerhelps to preventloosening.
3. Handwheel: Thehandwheel cycles thevalve.
4 & 14.Gland Bolts &Nuts: The glandbolt and nut allows for easyadjustments for packingcompression.
5. Gland Flange:Applies pressureto the glandfor accurate packing compression.
6. Gland: Compressesthe packing tocreate a stemseal above the backseat, between thebonnet and stem.
7. Packing: Thepacking creates aseal above theback seat, between the bonnetand stem.
8.Bonnet:Bolts:The bonnet bolts securethe bonnet to the body.
9.Bonnet:DBV bonnet assemblies are built to the same standards as the bodies.
10.BonnetGasket:The bonnet gasket creates a leakproof seal between the bonnet and body
11.Body:DBV forged steel bodies provide low resistance flow and optimum strength andperformance
12.SeatRing:To ensure a stable shutoff,the seat ring is aligned into the valve,then precision ground for optimal seating.
13.StemNut:The stem nut provides a precision guide for proper stemalignm
14.StuffingBox:ent.Thestuffing boxcontains the packing.
16. Stem: Thestem inserts verticallyinto the disc.
17. Lock Groove: The lock groovereceives the splitlock ring which allows thedisc nut tolift the discduring cycling.
18. Disc Nut:The disc nut,in conjunction withthe split lock ring, secures thedisc to thestem.
19. Split Ring:The split ringallows the discnut to liftthe disc duringcycling.
20. Disc: DBV plug typedisc is machinedto the tightest tolerances to ensuretrouble free shutoffand cycling.

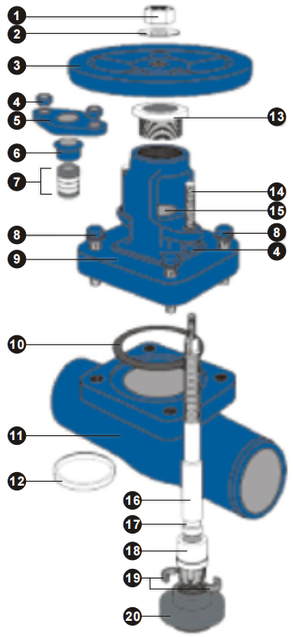

BOLTED & WELDED BONNET ● CLASS 150, 300, 600, 800, 1500 & 2500

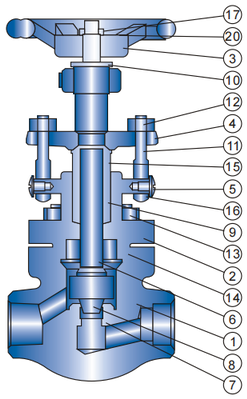

No.	Part	Material
1	Body	ASTM A105N Carbon Steel
2	Bonnet	ASTM A105N Carbon Steel
3	Handwheel	Carbon Steel
4	Gland Flange	ASTM A105 Carbon Steel
5	Eyebolt Screws	Zinc Plated Carbon Steel
6	Stem	ASTM A182 F6 Alloy Steel
7	Seat	ASTM S182 F6/Stellite 6 Facing
8	Disc	ASTM A182 F6 Alloy Steel
9	Packing	Graphite Stack
10	Yoke Nut	AISI Type 416 Stainless Steel
11	Eyebolts	ASTM A193 B8 Stainless Steel
12	Eyebolt Nuts	ASTM A194 2HM Carbon Steel
13	Cap Screws	ASTM A193 B7M Alloy Steel
14	Gasket	316 SS Spiral Wound Grafoil
15	Packing Gland	AISI Type 416 Stainless Steel
16	Lock Nut Washer	Stainless Steel
17	Handwheel Nut	Carbon Steel
20	Name Plate	Stainless Steel

DBV FORGED VALVES ARE MANUFACTURED IN STRICT ACCORDANCE WITH THE FOLLOWING STANDARDS:

API602	Compact steel gate valves
API598	Valve Inspection and Test
ANSI/ASME B16.34	Steel valve, flanged and butt-welding end
ANSI/ASME B16.5	Steel pipe flanges and flanged fittings
ANSI/ASME B16.10	Face-to-face and end-to-end dimensions of ferrous valves
ANSI/ASME B 16.11	Forged steel fittings, socket welding and threaded
ANSI/ASME B 1.20.1	Pipe threads, general purpose
ANSI/ASME B31.3	Chemical plant and petroleum refinery piping
MSS-SP-25	Standard marking system for valves, fittings, flanges and unions
MSS-SP-6	Standard finishes for contact faces of pipe, flanges and connecting end flanges of valves and fittings
NACE MR-01-75	Material requirements: Sulfide stress cracking resistant metallic materials for oil field equipment.

FORGED STEEL GLOBE VALVE

- Forged Steel Globe Valve, Outside Screw and York,
- Bolted, Welded & Union Bonnet, Rising Stem
- Threaded, Socketed, Buttwelded Ends
- Conventional Ports
- Designed to API 602

Face to Face	DBV Standard
Pipe Threads, G.P	ASME B1.20.1
Threaded Ends	ASME B16.11
Buttweld	ASME B16.25
Class	ASME CL800/1500

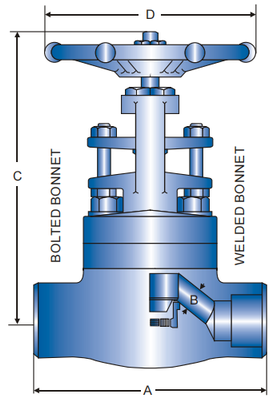

CLASS 800 DIMENSION CLASS 800 WB

SIZE (in.)	A	B	C	D	W.T (lbs)
					Unit:inch
1/2	3.2	0.35	6.3	3.2	4
3/4	3.5	0.49	6.7	3.2	4.4
1	4.3	0.68	7.9	3.9	7.3
1-1/4	5	0.88	9.3	4.7	11.9
1-1/2	6.1	1.15	9.3	5.5	17.4
2	6.7	1.37	11.4	6.7	23.8

CLASS 800 DIMENSION CLASS 800 BB

SIZE (in.)	A	B	C	D	W.T (lbs)
					Unit:inch
1/2	3.2	0.35	6.3	3.2	4
3/4	3.5	0.49	6.7	3.2	4.4
1	4.3	0.68	7.9	3.9	7.3
1-1/4	5	0.88	9.3	4.7	11.9
1-1/2	6.1	1.14	9.3	5.5	17.4
2	6.7	1.37	11.4	6.7	23.8

CLASS 1500 DIMENSION CLASS 1500 WB

SIZE (in.)	A	B	C	D	W.T (lbs)
					Unit:inch
1/2	3.5	0.35	6.5	3.2	4.2
3/4	4.3	0.43	7.7	4.7	7
1	4.7	0.57	9.3	5.5	12.1
1-1/4	5.1	0.75	10.4	5.5	17.6
1-1/2	6.7	1.06	11	5.5	24.2
2	8.3	1.22	13.2	6.7	29.6

CLASS 1500 DIMENSION CLASS 1500 BB

SIZE (in.)	A	B	C	D	W.T (lbs)
					Unit:inch
1/2	3.5	0.35	6.5	3.2	4.4
3/4	4.3	0.43	7.7	4.7	7.3
1	4.7	0.57	9.1	5.5	12.1
1-1/4	5.1	0.75	10.2	5.5	19.8
1-1/2	6.7	1.06	11.2	6.7	264
2	8.3	1.22	13	6.7	39.6

FORGED STEEL GLOBE VALVE

- Forged Steel Globe Valve, Outside Screw and York,
- Bolted, Welded & Union Bonnet, Rising Stem
- Threaded, Socketed, Buttwelded Ends
- Conventional Ports
- Designed to API 602

Face to Face	DBV Standard
Pipe Threads, G.P	ASME B1.20.1
Threaded Ends	ASME B16.11
Buttweld	ASME B16.25
Class	ASME CL2500

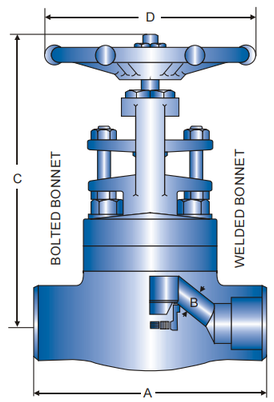

CLASS 2500 DIMENSION CLASS 2500 WB

SIZE (in.)	A	B	C	D	W.T (lbs)
					Unit:inch
1/2	4.3	0.43	7.7	4.7	8.6
3/4	4.7	055	8.9	5.5	14.1
1	5.1	0.75	10	5.5	19.9
1-1/4	8.3	0.94	12.8	6.7	44
1-1/2	8.3	11	13	6.7	48.4
2	9.5	1.42	14.6	10.2	61.6

CLASS 2500 DIMENSION CLASS 2500 BB

SIZE (in.)	A	B	C	D	W.T (lbs)
					Unit:inch
1/2	4.3	0.43	10.6	4.7	11
3/4	4.7	0.55	10.8	5.5	17.6
1	5.1	0.75	11.4	5.5	23.5
1-1/4	8.3	0.94	15.4	6.7	52.8
1-1/2	8.3	11	16.3	10.2	70.4
2	9.5	1.42	16.7	10.2	81.4

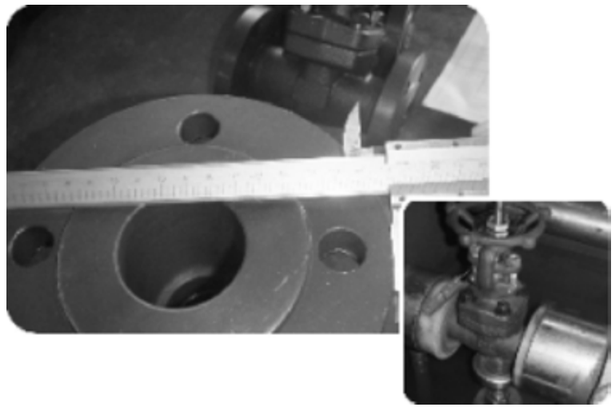

FORGED STEEL FLANGED GLOBE VALVE

- Forged Steel Globe Valve, Outside Screw and York,
- Bolted, Welded & Union Bonnet, Rising Stem
- Flanged Ends, Conventional Ports
- Designed to API 602

Face to Face	ASME/ANSI B16.10
Pipe Threads, G.P	ASME B1.20.1
Threaded Ends	ASME B16.11
Buttweld	ASME B16.25
Class	ASME CL150~CL1500

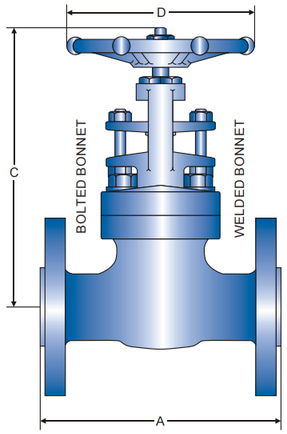

CLASS 150 DIMENSION
CLASS 150 BB&WB

SIZE (in.)	A	B	C	D	W.T (lbs)
					Unit:inch
1/2	4.25	0.39	5.2	5.20	9.9
3/4	4.63	0.39	5.4	5.80	15.2
1	5.00	0.69	7	7.20	21.6
1-1/4	-	0.9	8.3	-	29.7
1-1/2	6.50	1.18	8.4	9.20	42.9
2	8.00	1.46	10.3	10.50	61.6

CLASS 300 DIMENSION
CLASS 300 BB&WB

SIZE (in.)	A	B	C	D	W.T (lbs)
					Unit:inch
1/2	6.00	0.39	5.2	3.9	10.6
3/4	7.00	0.39	5.4	3.9	16.9
1	8.00	0.69	7	4.9	24.2
1-1/4	-	0.9	8.3	-	37
1-1/2	9.00	1.18	8.4	6.3	48.8
2	10.5	1.46	10.3	7.1	71.7

CLASS 600 DIMENSION
CLASS 600 BB&WB

SIZE (in.)	A	B	C	D	W.T (lbs)
					Unit:inch
1/2	6.50	0.39	5.2	3.15	12.3
3/4	7.50	0.39	5.4	3.15	17.2
1	8.50	0.69	7	3.94	27.5
1-1/4	-	0.9	8.3	-	37.4
1-1/2	9.51	1.18	8.4	5.51	51.7
2		1.46	10.3	5.51	85.4

CLASS 1500 DIMENSION
CLASS 1500 BB&WB

SIZE (in.)	A	B	C	D	W.T (lbs)
					Unit:inch
1/2	3.15	0.39	8.1	3.15	4.4
3/4	3.54	0.51	8.1	3.15	8.4
1	4.33	0.66	9.4	3.94	9.3
1-1/4	4.99	0.9	10.2	4.72	17.6
1-1/2	6.10	1.18	11.4	5.51	29.1
2	14.5	1.49	13.3	5.51	37

FORGED STEEL Y PATTERN GLOBE VALVE

- Forged Steel Globe Valve, Outside Screw and York,
- Bolted, Welded & Union Bonnet, Rising Stem
- Threaded, Socketed, Buttwelded Ends
- Y Pattern, Conventional Ports
- Designed to API 602

Face to Face	DBV Standards
Pipe Threads, G.P	ASME B1.20.1
Threaded Ends	ASME B16.11
Buttweld	ASME B16.25
Class	ASME CL800~CL2500

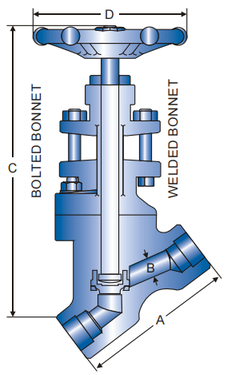

CLASS 800 DIMENSION

SIZE (in.)	A	B	C	D	W.T (lbs)
					Unit:inch
1/2	3.6	0.39	7.5	3.7	4.4
3/4	3.6	0.51	7.5	3.7	4.4
1	4.4	0.69	9.3	4.3	9
1-1/4	6	0.94	11.2	5.5	19.8
1-1/2	6	1.22	11.2	5.5	19.8
2	6.8	1.46	12.8	6.7	30.4

CLASS 1500 DIMENSION

SIZE (in.)	A	B	C	D	W.T (lbs)
					Unit:inch
1/2	3.9	0.51	7.3	3.9	6.6
3/4	4.3	0.69	9.1	5.5	8.8
1	4.9	0.89	9.4	5.5	11
1-1/4	5.9	1.1	12	6.7	20.9
1-1/2	6.3	1.38	13.4	7.9	24.2
2	7.5	1.73	15.7	10.2	37.4

CLASS 2500 DIMENSION

SIZE (in.)	A	B	C	D	W.T (lbs)
					Unit:inch
1/2	3.9	0.47	9.1	4.7	8.8
3/4	4.9	0.59	9.4	5.5	11
1	6.3	0.79	12	6.7	20.9
1-1/4	6.3	0.98	12	6.7	23.1
1-1/2	7.5	1.22	13.6	7.9	37.4
2	8.3	1.49	15.7	10.2	50.6

TYPICAL DBV FORGED STEEL CHECK VALVE EXPANDED VIEW

1. Body: DBV forged steel bodies provide low resistance flow and optimum strength and performance.
2. Cover Studs: The cover studs secure the bonnet to the body.
3. Cover: The cover allows access to internal components.
4. Spring: The spring is precision made and loaded for precise pressures.
5. Piston: DBV piston is machined to the tightest tolerances to ensure trouble free shutoff and cycling.
6. Cover Gasket: The cover gasket creates a leak-proof seal between the bonnet and the body.
7. Seat: The seat ensures a stable shutoff. The seat is precision ground for optimal seating.

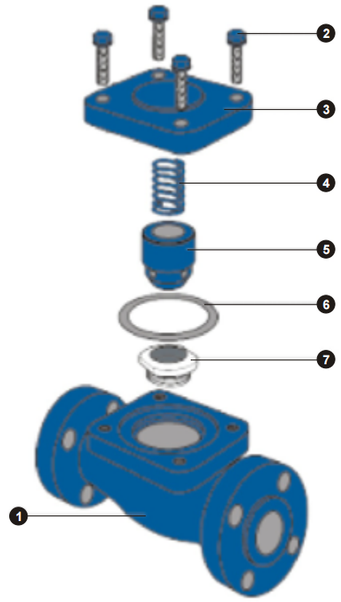

BOLTED, WELDED & UNION CAP ● CLASS 150, 300, 600, 800, 1500 & 2500

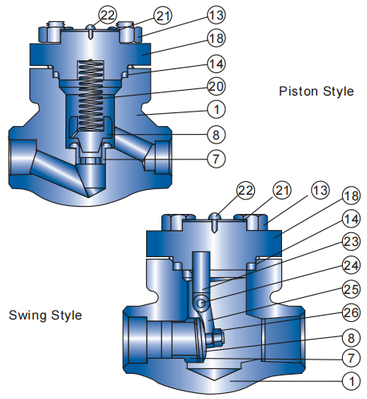

NO.	Part	Material
1	Body	A105N Carbon Steel
7	Seat	ASTM A182 F6/Stellite 6 Alloy Steel
8	Piston	ASTM A182 F6 Alloy Steel
8	Disc	ASTM A182 F6 Alloy Steel
13	Cap Screws	ASTM A193 B7M
14	Gasket	316 SS Spiral Wound Grafoil
18	Bolted Cover	A105N Carbon Steel
20	Spring	AISI 304 Stainless Steel
21	Name Plate	Aluminum
22	Rivet	Stainless Steel
23	Pin	ASTM A182 F6 Alloy Steel
24	Hinge Pin	Stainless Steel
25	Arm	ASTM A182 F6 Alloy Steel
26	Retaining Nut	ASTM A194 2HM

DBV FORGED VALVES ARE MANUFACTURED IN STRICT ACCORDANCE WITH THE FOLLOWING STANDARDS:

API602	Compact steel gate valves
API598	Valve Inspection and Test
ANSI/ASME B16.34	Steel valve, flanged and butt-welding end
ANSI/ASME B16.5	Steel pipe flanges and flanged fittings
ANSI/ASME B16.10	Face-to-face and end-to-end dimensions of ferrous valves
ANSI/ASME B 16.11	Forged steel fittings, socket welding and threaded
ANSI/ASME B 1.20.1	Pipe threads, general purpose
ANSI/ASME B31.3	Chemical plant and petroleum refinery piping
MSS-SP-25	Standard marking system for valves, fittings, flanges and unions
MSS-SP-6	Standard finishes for contact faces of pipe, flanges and connecting end flanges of valves and fittings
NACE MR-01-75	Material requirements: Sulfide stress cracking resistant metallic materials for oil field equipment.

FORGED STEEL CHECK VALVE

- Forged Steel Check Valve, Swing or Lift Piston
- Bolted, Welded & Union Bonnet
- Threaded, Socketed, Buttwelded Ends
- Conventional Ports
- Designed to API 602

Face to Face	DBV Standard
Pipe Threads, G.P	ASME B1.20.1
Threaded Ends	ASME B16.11
Buttweld	ASME B16.25
Class	ASME CL800

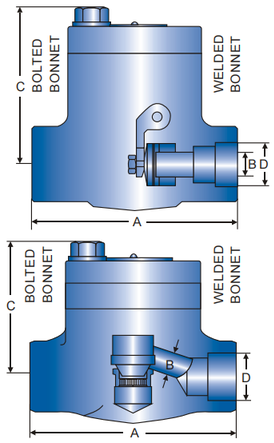

CLASS 800 DIMENSION
CLASS 800 BB LIFT

SIZE (in.)	A	B	C	D	W.T (lbs) Unit:inch
1/2	3.2	0.35	1.9	0.4	2.4
3/4	3.5	0.49	2.2	0.6	4
1	4.3	0.68	2.8	0.7	5.7
1-1/4	5	0.88	3	0.9	7.9
1-1/2	6.1	1.14	4.1	1.2	12.1
2	6.7	1.38	4.7	1.4	18.5

CLASS 800 DIMENSION
CLASS 800 BB SWING

SIZE (in.)	A	B	C	D	W.T (lbs) Unit:inch
1/2	3.2	0.35	1.9	0.4	2.4
3/4	3.5	0.49	2.2	0.6	4
1	4.3	0.68	2.8	0.7	5.7
1-1/4	5	0.88	3	0.9	7.9
1-1/2	6.1	1.14	4.1	1.2	12.1
2	5.1	1.44	4.7	2.4	19.6

CLASS 800 DIMENSION
CLASS 800 WB LIFT

SIZE (in.)	A	B	C	D	W.T (lbs) Unit:inch
1/2	3.2	0.35	1.9	0.4	2
3/4	3.5	0.49	2.2	0.6	2.6
1	4.3	0.68	2.7	0.7	4.6
1-1/4	5	0.88	3.2	0.9	7.5
1-1/2	6.1	1.14	3.7	1.2	11.7
2	6.7	1.38	4.1	1.4	17.2

CLASS 800 DIMENSION
CLASS 800 WB SWING

SIZE (in.)	A	B	C	D	W.T (lbs) Unit:inch
1/2	3.2	0.35	1.9	0.4	2
3/4	3.5	0.49	2.2	0.6	2.6
1	4.3	0.68	2.7	0.7	4.6
1-1/4	5	0.88	3.2	0.9	7.5
1-1/2	6.1	1.14	3.7	1.2	11.7
2	6.7	1.38	4.1	1.4	17.2

FORGED STEEL CHECK VALVE

- Forged Steel Check Valve, Swing or Lift Piston
- Bolted, Welded & Union Bonnet
- Threaded, Socketed, Buttwelded Ends
- Conventional Ports
- Designed to API 602

Face to Face	DBV Standard
Pipe Threads, G.P	ASME B1.20.1
Threaded Ends	ASME B16.11
Buttweld	ASME B16.25
Class	ASME CL1500

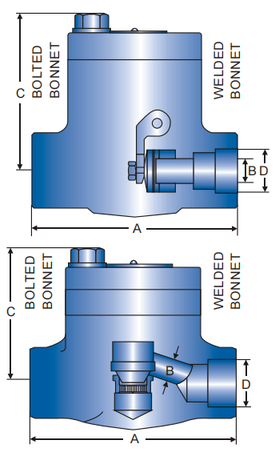

CLASS 1500 DIMENSION
CLASS 1500 BB LIFT

SIZE (in.)	A	B	C	D	W.T (lbs) Unit:inch
1/2	3.5	0.35	2.2	0.4	4.8
3/4	4.3	0.43	2.8	0.6	6.8
1	4.7	0.57	3	0.7	9.2
1-1/4	5.1	0.74	4.1	0.9	12.8
1-1/2	6.7	1.06	4.5	1.2	20.7
2	8.3	1.22	5.7	1.4	26.6

CLASS 1500 DIMENSION
CLASS1500 BB SWING

SIZE (in.)	A	B	C	D	W.T (lbs) Unit:inch
1/2	3.5	0.35	2.2	0.4	4.8
3/4	4.3	0.43	2.8	0.6	6.8
1	4.7	0.57	3	0.7	9.2
1-1/4	5.1	0.74	4.1	0.9	12.8
1-1/2	6.7	1.06	4.5	1.2	20.7
2	8.3	1.22	5.7	1.4	26.6

CLASS 1500 DIMENSION
CLASS 1500 WB LIFT

SIZE (in.)	A	B	C	D	W.T (lbs) Unit:inch
1/2	3.5	0.35	2.2	0.4	2.9
3/4	4.3	0.43	2.8	0.6	5.5
1	4.7	0.57	3.2	0.7	8.4
1-1/4	5.1	0.74	3.5	0.9	12.1
1-1/2	6.7	1.06	3.9	1.2	18.3
2	8.3	1.22	4.5	1.4	24.2

CLASS 1500 DIMENSION
CLASS1500 WB SWING

SIZE (in.)	A	B	C	D	W.T (lbs) Unit:inch
1/2	3.5	0.35	2.2	0.4	2.9
3/4	4.3	0.43	2.8	0.6	5.5
1	4.7	0.57	3.2	0.7	8.4
1-1/4	5.1	0.74	3.5	0.9	12.1
1-1/2	6.7	1.06	3.9	1.2	18.3
2	8.3	1.22	4.5	1.4	24.2

FORGED STEEL FLANGED CHECK VALVE

- Forged Steel Check Valve, Swing or Lift Piston
- Bolted, Welded & Union Bonnet, Flanged Ends
- Conventional Ports
- Designed to API 602

Face to Face	DBV Standard
Pipe Threads, G.P	ASME B1.20.1
Threaded Ends	ASME B16.11
Buttweld	ASME B16.25
Class	ASME CL150~CL1500

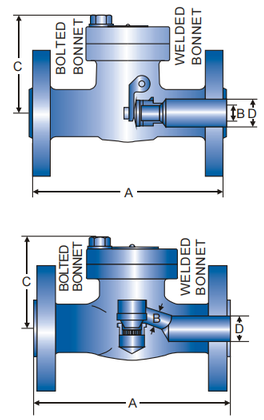

CLASS 150 DIMENSION

SIZE (in.)	A	B (LIFT)	B (SWING)	C	D	W.T (lbs) Unit:inch
1/2	4.3	0.35	0.4	2.8	0.5	6.2
3/4	4.6	0.49	0.4	3.2	0.75	8.8
1	5	0.68	0.7	3.6	1	11.7
1-1/4	-	-	-	-	-	-
1-1/2	6.5	1.14	1.2	3.9	1.5	19.8
2	8	1.37	1.4	5.5	2	33

CLASS 300 DIMENSION

SIZE (in.)	A	B (LIFT)	B (SWING)	C	D	W.T (lbs) Unit:inch
1/2	6	0.35	0.4	1.6	0.5	6.2
3/4	7	0.49	0.6	1.8	0.75	10.3
1	8	0.68	0.7	2.3	1	12.5
1-1/4	-	-	-	3.3	-	-
1-1/2	9	1.14	1.2	3.1	1.5	26
2	10.5	1.37	1.4	3.7	2	37.4

CLASS 600 DIMENSION

SIZE (in.)	A	B (LIFT)	B (SWING)	C	D	W.T (lbs) Unit:inch
1/2	6.5	0.35	0.4	1.6	0.5	8.8
3/4	7.5	0.49	0.6	1.8	0.75	12.8
1	8.5	0.68	0.7	2.3	1	20.9
1-1/4	-	-	-	3.3	-	22.9
1-1/2	9.5	1.14	1.2	3.1	1.5	34.3
2	11.5	1.37	1.4	3.7	2	53.9

CLASS 1500 DIMENSION

SIZE (in.)	A	B (LIFT)	B (SWING)	C	D	W.T (lbs) Unit:inch
1/2	8.5	0.43	0.6	3.5	0.5	16.7
3/4	9	0.57	0.7	4.1	0.69	23.8
1	10	0.74	0.9	4.7	0.87	31.9
1-1/4	-	-	-	-	-	-
1-1/2	12	1.22	1.4	6.3	1.37	68.2
2	14.5	1.48	1.6	6.7	1.87	94.6

FORGED STEEL CV VALUES GATES, GLOBES, CHECKS

DBV Forged Gate Valves	NPS	150-800 Full Bore	150-800 Reduced Bore	1500 Full Bore	1500 Reduced Bore	2500 Full Bore
	1/2	12	6	13	6	5
	3/4	23	10	24	11	12
	1	43	26	44	27	23
	1-1/4	57	44	59	45	43
	1-1/2	98	65	100	66	56
	2	200	103	*	99	97

DBV Forged Globe Valves	NPS	150-800 Full Bore	150-800 Reduced Bore	1500 Full Bore	1500 Reduced Bore
	1/2	3	2	3	2
	3/4	6	4	6	3
	1	12	6	12	6
	1-1/4	15	10	-	-
	1-1/2	21	18	20	16
	2	38	22	24	20

DBV Forged Y-Pattern Globe Valves	NPS	800	1500	2500
	1/2	5	5	3
	3/4	11	11	6
	1	14	15	12
	1-1/4	-	-	-
	1-1/2	37	35	27
	2	68	68	36

DBV Forged Swing Check Valves	NPS	150-800 Full Bore	150-800 Reduced Bore	1500 Full Bore	1500 Reduced Bore
	1/2	5	4	-	-
	3/4	12	6	-	-
	1	17	13	-	-
	1-1/4	26	18	-	-
	1-1/2	54	28	-	-
	2	101	55	-	-

DBV Forged Lift Check Valves	NPS	150-800 Full Bore	150-800 Reduced Bore	1500 Full Bore	1500 Reduced Bore
	1/2	3	1	3	2
	3/4	5	3	6	3
	1	11	6	11	5
	1-1/4	-	-	-	-
	1-1/2	18	15	19	11
	2	32	18	22	19

DBV Forged Lift Check Valves	NPS	800	1500	2500
	1/2	4	4	3
	3/4	11	11	6
	1	13	14	12
	1-1/4	-	-	-
	1-1/2	36	34	27
	2	67	67	36

Table Applies to Both Piston and Ball Check Valves

FEATURES

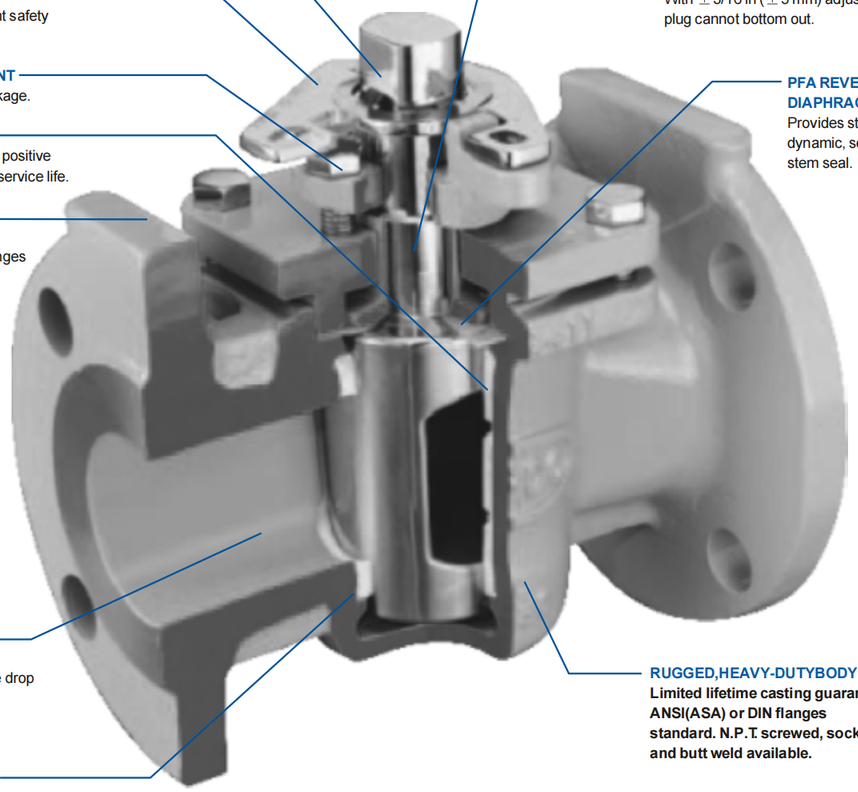

DOUBLE D PLUG STEM
Accepts most standard actuation equipment.

LOCKOUT
Meets OSHA and plant safety requirements.

IN-LINE ADJUSTMENT
Prevents thru-line leakage.

PTFE SLEEVE
Large seal area offers positive shutoff and extended service life.

ACTUATOR MOUNTING PADS
Mounts directly on flanges for solid support.

LARGE PORT OPENINGS
Assure less pressure drop and higher Cv.

RAISED LOCKING RIBS
Along with grooves and recesses positively lock sleeve in body.

WIDE MATERIALS SELECTION
Corrosion resistant stainless steels, nickel base and reactive alloys.

TAPERED PLUG
Assures reduced turning torque and in-line seal adjustment and wear. Adjustment is independent of stem seals. With ±3/16 in (±5 mm) adjustment, plug cannot bottom out.

PFA REVERSE LIP DIAPHRAGM
Provides static and dynamic, self-adjusting stem seal.

RUGGED,HEAVY-DUTYBODY
Limited lifetime casting guarantee. ANSI(ASA) or DIN flanges standard. N.P.T. screwed, socket and butt weld available.

MAIN PARTS MATERIALS

NO.	PART NAME	MATERIAL
1	Body	ASTM A216 WCB | ASTM A217-WC1、WC6、WC9、C5 | ASTM A351-CF8、CF8M、CF3、CF3M
2	Plug	ASTM A182-Gr.F6a | ASTM A182-F22 ASTM A182-F304、F316、F321、F304L、F316L
3	Gasket	Flexible graphite+stainless steel、PTFE
4	Cover	ASTM A216-WCB | ASTM A217-WC1、WC6、WC9、C5 | ASTM A351-CF8、CF8M、CF3、CF3M
5	Bolt	ASTM A193-B7，A320-B8，A193-B8M
6	Nut	ASTM A194-2H，A194-8，A194-8M
7	Packing	Flexible graphite+stainless steel、PTFE
8	Gland	ASTM A216-WCB | ASTM A217-WC1、WC6、WC9、C5 | ASTM A351-CF8、CF8M、CF3、CF3M
9	Wrench	ASTM A216-WCB | ASTM A351-CF8、CF8M、CF3、CF3M
10	Yoke nut	ZQA19-4
11	Handwheel	ASTM A536 Gr.60-40-18，ASTM A216-WCB

OTHER MATERIALS AVAILABLE UPON REQUEST

INVERTED PRESSURE BALANCE LUBRCIATED PLUG VALVE

- Cast Steel Plug Valve
- Outside Screw and York, Bolted Cover
- Oil-Lubricated, Pressure Balance
- Designed to API 599, API 6D

Face to Face	ASME/ANSI B16.10
End Flange	ASME/ANSI B16.5
Butt Weld	ASME/ANSI B16.25
Class	ASME/ANSI CL150~CL900

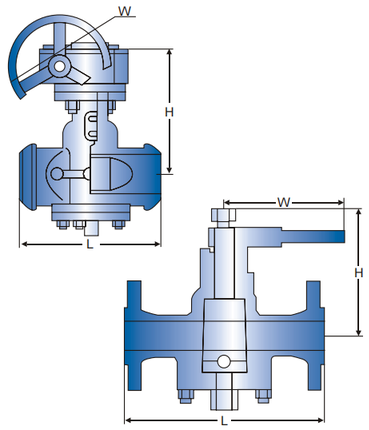

CLASS 150 DIMENSIONS

SIZE (in.)	1/ 2"	3/4"	1"	1-1/4"	1-1/2"	2"	2-1/2"	3"	4"	5"	6"	8"	10"	12"	14"
															Unit: mm
L	108	117	127	140	165	178	190	203	229	254	267	292	330	356	381
H	180	180	185	200	210	215	250	270	300	340	365	400	450	510	590
W	400	400	500	500	600	600	820	820	300	300	320	320	350	380	380
W.T(kg)	10	12	14	17	19	21	29	33	48	75	98	125	171	230	370

CLASS 300 DIMENSIONS

SIZE (in.)	1/ 2"	3/4"	1"	1-1/4"	1-1/2"	2"	2-1/2"	3"	4"	5"	6"	8"	10"	12"	14"
															Unit: mm
L	140	152	165	178	190	216	241	283	305	381	403	419	457	502	762
H	180	180	185	200	210	215	250	270	300	340	365	400	450	510	590
W	400	400	500	600	600	820	1000	1000	300	300	320	320	350	380	380
W.T(kg)	12	14	14	19	21	24	31	36	61	86	130	190	255	380	560

CLASS 600 DIMENSIONS

SIZE (in.)	1/ 2"	3/4"	1"	1-1/4"	1-1/2"	2"	2-1/2"	3"	4"	5"	6"	8"	10"	12"	14"
															Unit: mm
L	165	190	216	229	241	292	330	356	432	508	559	660	787	838	889
H	180	180	185	200	210	215	250	270	300	340	365	400	450	510	590
W	400	400	500	500	600	600	820	820	300	300	320	320	350	380	380
W.T(kg)	14	16	18	20	24	29	35	47	91	129	210	320	660	920	1250

CLASS 900 DIMENSIONS

SIZE (in.)	1/ 2"	3/4"	1"	1-1/4"	1-1/2"	2"	2-1/2"	3"	4"	5"	6"	8"	10"	12"	14"
															Unit: mm
L	229	229	254	279	305	368	419	381	457	559	610	737	838	965	1029
H	180	180	185	200	210	215	250	270	300	340	365	400	450	510	590
W	400	400	500	60	600	820	1000	1000	300	300	320	320	350	380	380
W.T(kg)	17	19	21	24	30	37	44	65	110	160	255	380	810	1050	1460

ANSI STANDARD SLEEVE TYPE PLUG VALVE

- Cast Steel Plug Valve
- Outside Screw and York, Bolted Cover
- Resilient Seat Sleeved
- Designed to API 599, API 6D

Face to Face	ASME/ANSI B16.10
End Flange	ASME/ANSI B16.5
Butt Weld	ASME/ANSI B16.25
Class	ASME/ANSI CL150~CL900

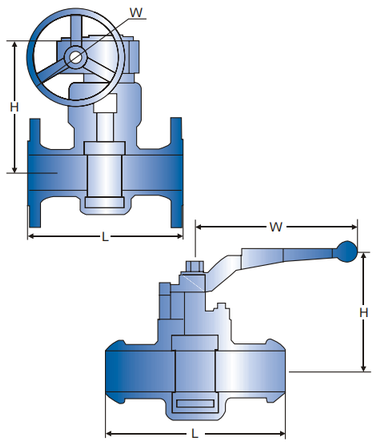

CLASS 150 DIMENSIONS

SIZE (in.)	1/ 2"	3/4"	1"	1-1/4"	1-1/2"	2"	2-1/2"	3"	4"	5"	6"	8"	10"	12"	14"
															Unit: mm
L	108	117	127	140	165	178	190	203	229	254	267	292	330	356	381
H	110	115	115	135	140	150	165	180	380	460	520	580	620	680	760
W	175	175	175	220	280	305	350	405	300	300	320	320	350	380	450
W.T(kg)	8.5	9.5	10.5	12	14	18	22	26	40	60	70	130	219	381	570

CLASS 300 DIMENSIONS

SIZE (in.)	1/ 2"	3/4"	1"	1-1/4"	1-1/2"	2"	2-1/2"	3"	4"	5"	6"	8"	10"	12"	14"
															Unit: mm
L	140	152	165	178	190	216	241	283	305	381	403	419	457	502	762
H	110	115	115	135	140	150	165	180	380	460	520	580	620	680	760
W	175	175	175	220	280	305	350	405	300	300	320	320	350	380	450
W.T(kg)	9.5	10.5	12	14	16	20	24	29	53	75	85	185	230	390	550

CLASS 600 DIMENSIONS

SIZE (in.)	1/ 2"	3/4"	1"	1-1/4"	1-1/2"	2"	2-1/2"	3"	4"	5"	6"	8"	10"	12"	14"
															Unit: mm
L	165	190	216	229	241	292	330	356	432	508	559	660	787	838	889
H	110	115	115	135	140	150	165	180	380	460	520	580	620	680	760
W	175	175	175	220	280	305	350	405	300	300	320	320	350	380	450
W.T(kg)	11	13	17	20	23	27	31	36	72	98	141	245	330	515	710

CLASS 900 DIMENSIONS

SIZE (in.)	1/ 2"	3/4"	1"	1-1/4"	1-1/2"	2"	2-1/2"	3"	4"	5"	6"	8"	10"	12"	14"
															Unit: mm
L	229	229	254	279	305	368	419	381	457	559	610	737	838	965	1029
H	110	115	115	135	140	150	165	180	380	460	520	580	620	680	760
W	175	175	175	220	280	305	350	405	300	300	320	320	350	380	450
W.T(kg)	13	16	21	24	28	32	40	47	91	117	165	285	420	610	860

DIN STANDARD SLEEVE TYPE PLUG VALVE

- Cast Steel Plug Valve
- Outside Screw and York, Bolted Cover
- Resilient Seat Sleeved
- Designed to DIN Standard

Face to Face	DIN3202 F1
End Flange	DIN 2543~2549
Butt Weld	EN12627
Class	PN16~PN64

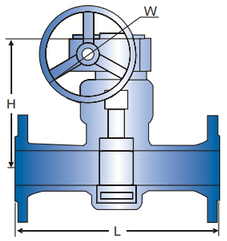

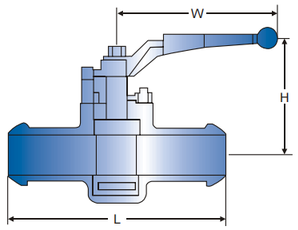

PN16 DIMENSIONS

Unit: mm

SIZE (DN)	15	20	25	32	40	50	65	80	100	125	150	200	250	300	350
L	130	150	160	180	200	230	290	310	350	400	480	600	730	850	980
H	150	155	160	180	190	200	220	230	380	460	520	580	620	680	740
W	300	300	300	350	400	500	500	550	300	300	320	320	350	380	380
W.T(kg)	9	10	11	13	14	19	23	27	43	62	75	155	222	390	580

PN25 DIMENSIONS

Unit: mm

SIZE (DN)	15	20	25	32	40	50	65	80	100	125	150	200	250	300	350
L	130	150	160	180	200	230	290	310	350	400	480	600	730	850	980
H	150	155	160	180	190	200	220	230	380	460	520	580	620	680	740
W	300	300	300	350	400	500	500	550	300	300	320	320	350	380	380
W.T(kg)	10	11	13	15	17	22	31	55	77	88	190	190	235	399	580

PN40 DIMENSIONS

Unit: mm

SIZE (DN)	15	20	25	32	40	50	65	80	100	125	150	200	250	300	350
L	130	150	160	180	200	230	290	310	350	400	480	600	730	850	980
H	190	195	225	260	280	310	340	395	435	470	535	590	630	680	720
W	120	140	140	180	200	220	260	280	300	340	400	450	450	500	500
W.T(kg)	12	14	18	21	24	29	33	39	75	103	146	251	337	521	720

PN64 DIMENSIONS

Unit: mm

SIZE (DN)	15	20	25	32	40	50	65	80	100	125	150	200	250	300	350
L	130	150	160	180	200	230	290	310	350	400	480	600	730	850	980
H	190	195	225	260	280	310	340	395	435	470	535	590	630	680	720
W	120	140	140	180	200	220	260	280	300	340	400	450	450	500	500
W.T(kg)	14	17	22	25	29	34	43	50	94	123	170	291	430	625	875

LIFTING PLUG VALVE

- Cast Steel Plug Valve, Lift Pattern
- Outside Screw and York, Bolted Cover
- Designed to API 599, API 6D

Face to Face	ASME/ANSI B16.10
End Flange	ASME/ANSI B16.5
Butt Weld	ASME/ANSI B16.25
Class	ASME/ANSI CL150~CL300

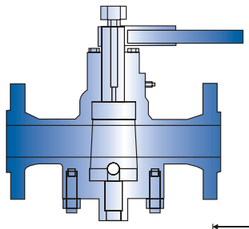

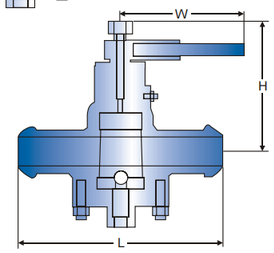

CLASS 150 DIMENSIONS

Unit: mm

SIZE (in.)	1/2"	3/4"	1"	1-1/4"	1-1/2"	2"	2-1/2"	3"	4"	5"	6"	8"	10"	12"	14"
L	108	117	127	140	165	178	190	203	229	254	267	292	330	356	381
H	190	195	225	260	280	310	340	395	435	470	535	590	630	680	720
W	120	140	140	180	200	220	260	280	300	340	400	450	450	500	500
W.T(kg)	9	10	11	17	19	23	25	32	55	82	98	130	178	250	380

CLASS 300 DIMENSIONS

Unit: mm

SIZE (in.)	1/2"	3/4"	1"	1-1/4"	1-1/2"	2"	2-1/2"	3"	4"	5"	6"	8"	10"	12"	14"
L	140	152	165	178	190	216	241	283	305	381	403	419	457	502	762
H	190	195	225	260	280	310	340	395	435	470	535	590	630	680	720
W	120	140	140	180	200	220	260	280	300	340	400	450	450	500	500
W.T(kg)	10	12	14	19	21	28	34	39	75	95	135	200	255	415	650

LIFTING PLUG VALVE

- Cast Steel Plug Valve, Lift Pattern
- Outside Screw and York, Bolted Cover
- Designed to API 599, API 6D

Face to Face	ASME/ANSI B16.10
End Flange	ASME/ANSI B16.5
Butt Weld	ASME/ANSI B16.25
Class	ASME/ANSI CL600~CL900

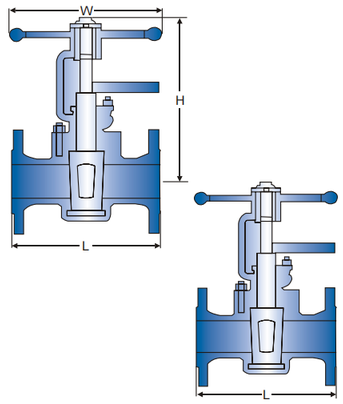

CLASS 600 DIMENSIONS

Unit: mm

SIZE (in.)	1/2"	3/4"	1"	1-1/4"	1-1/2"	2"	2-1/2"	3"	4"	5"	6"	8"	10"	12"	14"
L	165	190	216	229	241	292	330	356	432	508	559	660	787	838	889
H	190	195	225	260	280	310	340	395	435	470	535	590	630	680	720
W	120	140	140	180	200	220	260	280	300	340	400	450	450	500	500
W.T(kg)	13	14	19	23	25	32	40	55	105	139	300	440	730	1150	1570

CLASS 900 DIMENSIONS

Unit: mm

SIZE (in.)	1/2"	3/4"	1"	1-1/4"	1-1/2"	2"	2-1/2"	3"	4"	5"	6"	8"	10"	12"	14"
L	229	229	254	279	305	368	419	381	457	559	610	737	838	965	1029
H	190	195	225	260	280	310	340	395	435	470	535	590	630	680	720
W	120	140	140	180	200	220	260	280	300	340	400	450	450	500	500
W.T(kg)	16	17	26	30	33	39	50	70	137	181	397	590	860	1470	1880

ORBIT PLUG VALVE

- Cast Steel Plug Valve, Orbited
- Double Block and Bleed
- Outside Screw and York, Bolted Cover
- Designed to API 599, API 6D

Face to Face	ASME/ANSI B16.10
End Flange	ASME/ANSI B16.5
Butt Weld	ASME/ANSI B16.25
Class	ASME/ANSI CL150~CL900

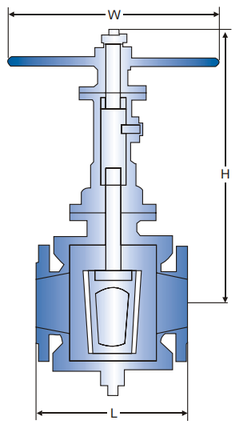

CLASS 150 DIMENSIONS

Unit: mm

SIZE (in.)	1/2"	3/4"	1"	1-1/4"	1-1/2"	2"	2-1/2"	3"	4"	5"	6"	8"	10"	12"	14"
L	108	117	127	140	165	178	190	203	229	254	267	292	330	356	381
H	230	260	300	340	380	435	460	490	525	570	625	700	780	870	980
W	120	140	140	180	200	220	260	280	300	340	40	450	450	500	500
W.T(kg)	10	12	14	19	21	28	34	39	75	95	135	200	255	415	650

CLASS 300 DIMENSIONS

Unit: mm

SIZE (in.)	1/2"	3/4"	1"	1-1/4"	1-1/2"	2"	2-1/2"	3"	4"	5"	6"	8"	10"	12"	14"
L	140	152	165	178	190	216	241	283	305	381	403	419	457	502	762
H	230	260	300	340	380	435	460	490	525	570	625	700	780	870	980
W	120	140	140	180	200	220	260	280	300	340	400	450	450	500	500
W.T(kg)	11	13	20	27	31	37	44	60	82	115	165	225	305	405	650

CLASS 600 DIMENSIONS

Unit: mm

SIZE (in.)	1/2"	3/4"	1"	1-1/4"	1-1/2"	2"	2-1/2"	3"	4"	5"	6"	8"	10"	12"	14"
L	165	190	216	229	241	292	330	356	432	508	559	660	787	838	889
H	230	260	300	340	380	435	460	490	525	570	625	700	780	870	980
W	120	140	140	180	200	220	260	280	300	340	400	450	450	500	500
W.T(kg)	8.5	15	22	29	34	41	54	68	99	128	191	258	430	650	870

CLASS 900 DIMENSIONS

Unit: mm

SIZE (in.)	1/2"	3/4"	1"	1-1/4"	1-1/2"	2"	2-1/2"	3"	4"	5"	6"	8"	10"	12"	14"
L	229	229	254	279	305	368	419	381	457	559	610	737	838	965	1029
H	230	260	300	340	380	435	460	490	525	570	625	700	780	870	980
W	120	140	140	180	200	220	260	280	300	340	400	450	450	500	500
W.T(kg)	15	19	24	32	38	47	62	75	115	147	220	379	490	720	1020

DBV THROUGH CONDUIT VALVE DESIGN FEATURES

The DBV valve's through conduit expanding gate design provides specific advantages resulting in reliable performance and long life. The Expanding Gate valves perform in critical applications as block valves in process system refineries, pipelines and isolation valves in power plant.

FULL BORE
Permits the passage of cleaning and scraping tools. Turbulence and pressure drops are minimized. Through conduit Valve body cavity is isolated from flow.

EXPANDING GATE
The valve's parallel expanding gate provides a simultaneous tight mechanical seat seal upstream and downstream against the seats in both open or closed position. Seal is not affected by pressure changes, heat or vibration

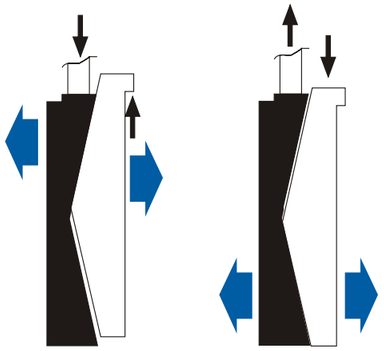

CLOSED POSITION OPEN POSITION

SEATS

Seat faces are in full contact with the gate whether the valve is closed or open, hence outside the flow stream for a long life operation.The seats are energized by line pressure and spring loaded and mechanical action of the double disc. Primary seat seal elastomer inserts are placed into a groove, supported by a secondary metal-to metal seating. Seats can be removed and replaced while the valve is in line Parallel expanding gate allows a tight mechanical seal both upstream and downstream.

A. During travel, the gate and segment assembly is collapsed and matches at all four surfaces. The face-to face width of gate is less than distance between seats so that gate & segment travel freely without sticking or wedging.

B. In closed position, the two top angles are in contact. With further downward movement the segment halted against the stop, so that the continued descent of the gate allow the solid gate segment -surface to expand, against the seats.

C. In open position the two bottom angles are in contact. With further upward movement of the segment the gate/segment assembly expand, sealing against the seats and isolating the body cavity from the flow.

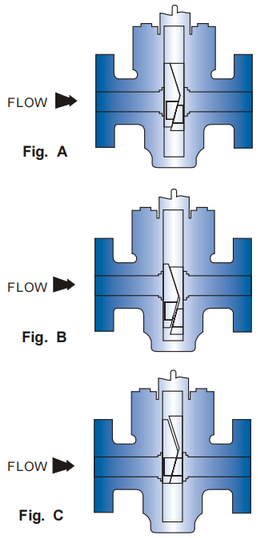

BLOCK & BLEED CAPABILITY

Tight closure at both seats allows body cavity to be drained with pressure both up and down stream.

STEM & STEM PACKING

Improved Chevron type "v" style interlocking stem packing rings with provision made for sealant/lubricant injection into packing chamber.

SEALANT INJECTION

Emergency sealing injection facility can be provided on valves 6" and larger size.

PERMANENT LUBRICATION

DBV Valve's gate and stem can be coated with solid film lubricant, corrosion resistant, low friction material which lubricates wearing surface.

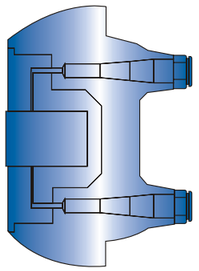

SEALANT INJECTION SYSTEM

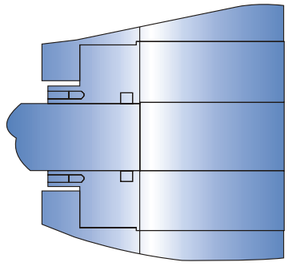

SPRING ENERGIZED FLOATING SEATS

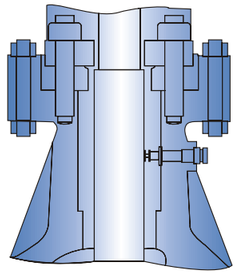

TYPICAL STEM PACKING CONSTRUCTION

FLOW CHARALTERISTIC

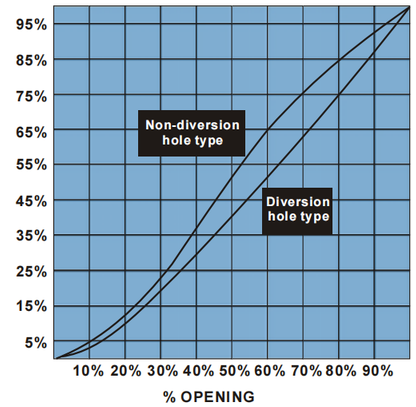

DIFFERENT TYPES OF SHUTTER

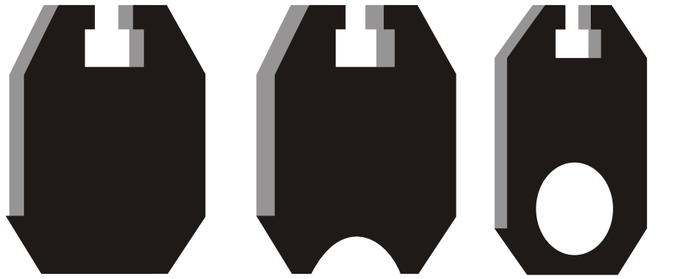

ORDINARY TYPE ADJUSTMENT TYPE TYPE ADIVERSION HOLE

DN-CV GRAPH OF SLAB GATE VALVE WITH A DIVERSION HOLE

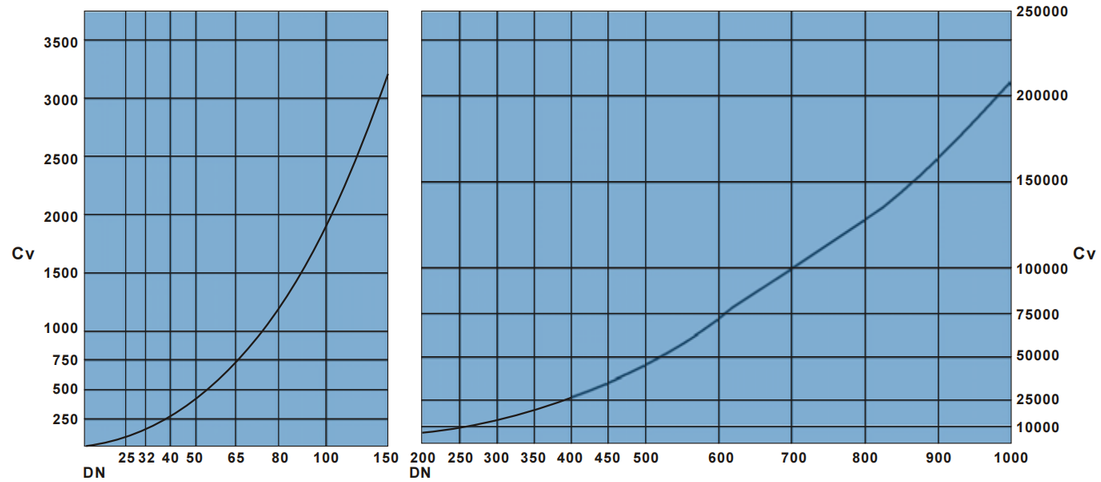

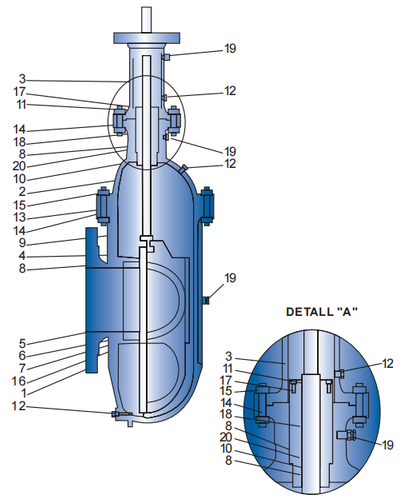

MAIN PARTS MATERIALLIST

NO	PART NAME	MATERIAL	NO	PART NAME	MATERIAI
1	Body	A216 WCB	11	Gland flange	A180 F304 + O-ring
2	Bonnet	A216 WCB	12	Plug	A105
3	Yoke	A216 WCB	13	Body/Bonnet S.W. Gasket	AISI 316 + GRAPHITE
4	Gate	A182 F6A + ENP	14	Bolt	A193 B7
5	Seat ring	A182 F6A	15	Nut	A194 Gr.2H
6	Spring	INCONEL X750	16	Gate Plate Guide	CARBON STEEL
7	Insert	PTFE	17	Screw	Steel 12.9
8	O-ring	VITON	18	Lantern Ring	AISI 304
9	Stem	A182 F6A	19	Seal Injection Fittings	INOX STAIINLESS STEEL
10	Stem Bushong	A182 F304	20	Stem Packing	PTFE

THROUGH CONDUIT GATE VALVE

- Cast Steel Slab Gate Valve
- Outside Screw and York, Rising Stem,
- Double Block and Bleed, Self-relieving
- Imergency Sealing Injection System
- Designed to API 6D

Face to Face	ASME/ANSI B16.10
End Flange	ASME/ANSI B16.5
Butt Weld	ASME/ANSI B16.25
Class	ASME/ANSI CL150

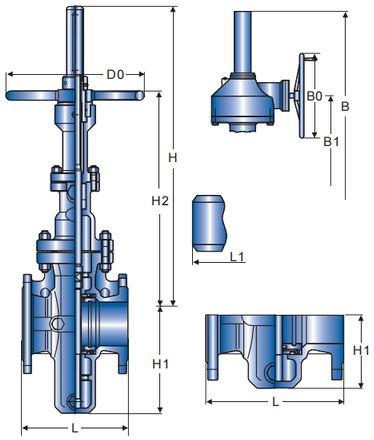

CLASS 150 DIMENSIONS

Unit:mm

SIZE (in.)	FLG L	B.W L1	H	H2	D0	B	B1	B0	G.O SIZE	H1
1	127	127	360	250	180	-	-	-	-	85
1-1/4	140	140	375	260	180	-	-	-	-	103
1-1/2	165	165	410	290	250	-	-	-	-	115
2	178	216	450	315	250	-	-	-	-	122
2-1/2	190	241	550	420	300	-	-	-	-	154
3	203	283	610	428	300	-	-	-	-	169
4	229	305	700	494	300	770	650	310	BA-0	193
6	267	403	895	625	350	965	800	310	BA-0	283
8	292	419	1130	784	350	1200	960	310	BA-0	352
10	330	457	1290	937	400	1360	1080	310	BA-0	440
12	356	502	1480	1080	450	1560	1200	310	BA-0	514
14	381	572	1660	1283	500	1740	1350	460	BA-1	602
16	406	610	1850	1417	500	1930	1500	460	BA-1	678
18	432	660	2080	1489	600	2160	1680	460	BA-1	785
20	457	711	2300	1672	700	2420	1850	460	BA-1	855
24	508	813	2680	2012	800	2800	2120	460	BA-2	1045
28	610	914	3080	2250	800	3200	2450	460	BA-2	1190
32	660	965	3491	2550	1000	3640	2800	460	BA-2	1350
36	711	1016	3897	2850	1000	4050	3080	600	BA-3	1510
40	811	-	4317	3250	1200	4467	3400	600	BA-3	1715

THROUGH CONDUIT GATE VALVE

- Cast Steel Slab Gate Valve
- Outside Screw and York, Rising Stem,
- Double Block and Bleed, Self-relieving
- Imergency Sealing Injection System
- Designed to API 6D

Face to Face	ASME/ANSI B16.10
End Flange	ASME/ANSI B16.5
Butt Weld	ASME/ANSI B16.25
Class	ASME/ANSI CL300

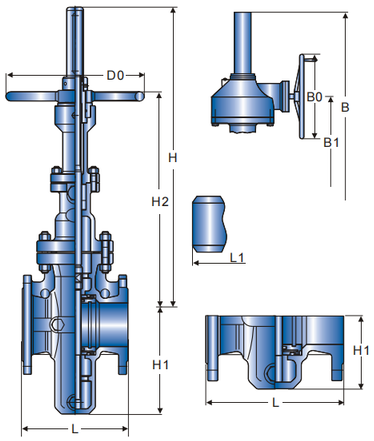

CLASS 300 DIMENSIONS

Unit:mm

SIZE (in.)	FLG L	B.W L1	H	H2	D0	B	B1	B0	G.O SIZE	H1
1	165	165	370	260	180	-	-	-	-	90
1-1/4	178	178	385	270	180	-	-	-	-	115
1-1/2	190	190	420	300	250	-	-	-	-	130
2	216	216	458	325	250	-	-	-	-	137
2-1/2	241	241	555	420	300	-	-	-	-	169
3	283	283	615	430	300	-	-	-	-	184
4	305	305	710	500	300	770	650	310	BA-0	218
6	403	403	900	625	350	965	800	310	BA-0	311
8	419	419	1135	790	350	1200	960	310	BA-0	382
10	457	457	1401	1040	400	1360	1090	310	BA-0	476
12	502	502	1580	1150	450	1560	1200	310	BA-1	545
14	572	762	-	-	-	1740	1350	460	BA-1	645
16	610	838	-	-	-	1930	1540	460	BA-1	728
18	660	914	-	-	-	2160	1700	460	BA-1	800
20	711	991	-	-	-	2420	1850	460	BA-2	930
24	787	1143	-	-	-	2800	2120	460	BA-2	1100
28	914	1346	-	-	-	3200	2460	460	BA-2	1260
32	965	1524	-	-	-	3640	2800	460	BA-2	1420
36	1016	1727	-	-	-	4050	3080	600	BA-3	1510

THROUGH CONDUIT GATE VALVE

- Cast Steel Slab Gate Valve
- Outside Screw and York, Rising Stem,
- Double Block and Bleed, Self-relieving
- Imergency Sealing Injection System
- Designed to API 6D

Face to Face	ASME/ANSI B16.10
End Flange	ASME/ANSI B16.5
Butt Weld	ASME/ANSI B16.25
Class	ASME/ANSI CL400

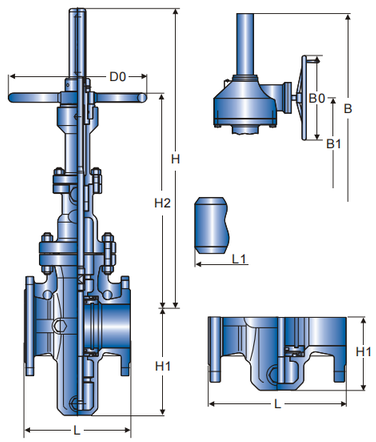

CLASS 400 DIMENSIONS

Unit:mm

SIZE (in.)	FLG L	B.W L1	H	H2	D0	B	B1	B0	G.O SIZE	H1
2	216	292	458	325	300	505	430	310	BA-0	158
2-1/2	241	330	555	420	300	560	470	310	BA-0	190
3	283	356	615	430	350	610	510	310	BA-0	225
4	305	406	710	500	350	770	650	310	BA-0	255
6	403	495	900	625	400	965	800	310	BA-0	330
8	419	597	1135	790	500	1200	960	310	BA-0	410
10	457	673	1401	1040	500	1370	1090	460	BA-1	490
12	502	762	1580	1150	600	1560	1200	460	BA-1	570
14	762	826	-	-	-	1740	1350	460	BA-1	650
16	838	902	-	-	-	1970	1540	460	BA-2	735
18	914	978	-	-	-	2260	1700	460	BA-2	810
20	991	1054	-	-	-	2420	1850	460	BA-2	905
24	1143	1232	-	-	-	2800	2120	600	BA-3	1070
28	1346	1397	-	-	-	3230	2460	600	BA-3	1230

THROUGH CONDUIT GATE VALVE

- Cast Steel Slab Gate Valve
- Outside Screw and York, Rising Stem,
- Double Block and Bleed, Self-relieving
- Imergency Sealing Injection System
- Designed to API 6D

Face to Face	ASME/ANSI B16.10
End Flange	ASME/ANSI B16.5
Butt Weld	ASME/ANSI B16.25
Class	ASME/ANSI CL600/900

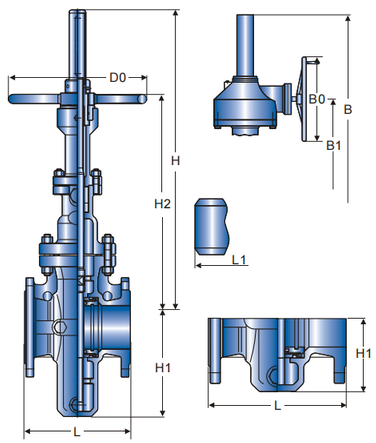

CLASS 600 DIMENSIONS

Unit:mm

SIZE (in.)	FLG L	B.W L1	H	H2	D0	B	B1	B0	G.O SIZE	H1
2	250	292	468	335	300	505	430	310	BA-0	158
2 1/2	280	330	565	430	300	560	470	310	BA-0	190
3	310	356	625	440	350	610	510	310	BA-0	225
4	350	432	720	510	350	770	650	310	BA-0	255
6	450	559	910	630	400	965	800	310	BA-0	330
8	550	660	1145	800	500	1200	960	310	BA-1	410
10	650	787	1411	1050	500	1370	1090	460	BA-1	490
12	750	838	1590	1160	600	1560	1200	460	BA-1	570
14	850	889	-	-	-	1740	1350	460	BA-2	650
16	950	991	-	-	-	1970	1540	460	BA-2	735
18	1050	1092	-	-	-	2260	1700	460	BA-2	810
20	1150	1194	-	-	-	2420	1850	460	BA-2	905

CLASS 900 DIMENSIONS

Unit:mm

SIZE (in.)	FLG L	B.W L1	H	H2	D0	B	B1	B0	G.O SIZE	H1
2	300	368	473	335	300	525	450	310	BA-0	158
2-1/2	340	419	570	435	300	585	490	310	BA-0	190
3	380	381	630	445	350	635	530	310	BA-0	225
4	430	457	725	515	350	800	680	310	BA-0	255
6	500	610	915	640	400	995	830	310	BA-1	330
8	580	737	1150	800	500	1250	1000	460	BA-1	410
10	680	838	1416	1055	500	1420	1140	460	BA-1	490
12	775	965	1595	1165	600	1600	1230	460	BA-2	570

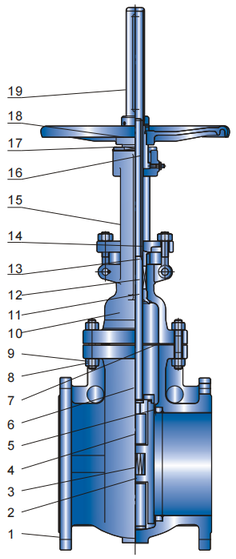

MAIN PARTS MATERIALLIST

NO.	PART NAME	MATERIAL TO ASTM STANDARD	ANTI-SULPHUR
1	Body	A216-WCB	A216-WCB
2	Disc	A105+STL	A276-304+STL
3	Spring	Inconel X-750	Inconel X-750
4	Disc frame	A216-WCB	A216-WCB
5	Seat	A105+STL	A276-304+STL
6	Stem	A276-410	A276-304
7	Gasket	Graphite+304	Graphite+304
8	Stud	A193-B7	A193-B7
9	Nut	A194-2H	A194-2H
10	Bonnet	A216-WCB	A216-WCB
11	Back seat	A276-410	A276-304
12	Packing	Graphite	Graphite
13	Packing press-sleeve	A276-420	A276-420
14	Packing gland	A276-WCB	A216-WCB
15	Yoke	A216-WCB	A216-WCB
16	Stem nut	C95500	C95500
17	Gland	A105	A105
18	Hand wheel	A536-60-40-18	A536-60-40-18
19	Indicating cover	A105	A105

Notes: Ma terials can be designed and selected based on actual work condition or customers' specific requirement.

EXPANDING GATE VALVE

- Cast Steel Slab Gate Valve, Double Expanding
- Outside Screw and York, Rising Stem,
- Double Block and Bleed, Self-relieving
- Imergency Sealing Injection System
- Designed to API 6D

Face to Face	ASME/ANSI B16.10
End Flange	ASME/ANSI B16.5
Butt Weld	ASME/ANSI B16.25
Class	ASME/ANSI CL150/300

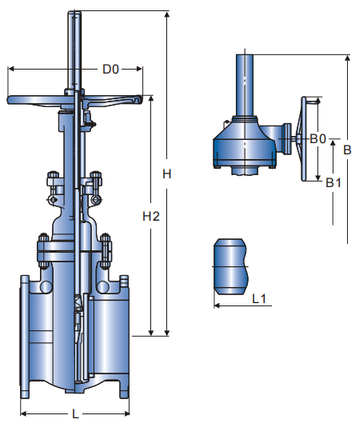

CLASS 150 DIMENSIONS

SIZE (in.)	FLG L	B.W L1	H	H2	D0	B	B1	B0	G.O SIZE
									Unit:mm
2	250	216	475	360	250	-	-	-	-
2-1/2	280	241	535	425	300	-	-	-	-
3	310	283	600	460	300	-	-	-	-
4	350	305	700	535	350	-	-	-	-
6	450	403	910	685	350	-	-	-	-
8	550	419	1095	815	350	1235	900	310	BA-0
10	650	457	1370	965	450	1510	1050	310	BA-0
12	750	502	1470	1100	500	1610	1185	310	BA-0
14	850	572	1730	1250	600	1890	1345	460	BA-1
16	950	610	1870	1375	650	2030	1470	460	BA-1
18	1050	660	2185	1485	700	2415	1625	460	BA-2
20	1150	711	2335	1575	800	2565	1715	460	BA-2
24	1350	813	2815	1995	1000	3045	2135	460	BA-2
28	1450	914	-	-	-	-	-	-	-
32	1650	965	-	-	-	-	-	-	-
36	1880	1016	-	-	-	-	-	-	-

CLASS 300 DIMENSIONS

SIZE (in.)	FLG L	B.W L1	H	H2	D0	B	B1	B0	G.O SIZE
									Unit:mm
2	216	216	475	360	250	-	-	-	-
2-1/2	241	241	535	425	300	-	-	-	-
3	283	283	600	460	300	-	-	-	-
4	305	305	700	535	350	-	-	-	-
6	403	403	910	685	350	-	-	-	-
8	419	419	1095	815	350	1235	900	310	BA-0
10	457	457	1370	965	450	1510	1050	310	BA-0
12	502	502	1470	1100	500	1610	1185	310	BA-0
14	762	762	1730	1250	600	1890	1345	460	BA-1
16	838	838	1870	1375	650	2030	1470	460	BA-1
18	914	914	2185	1485	700	2415	1625	460	BA-2
20	991	991	2335	1575	800	2565	1715	460	BA-2
24	1143	1143	2815	1995	1000	3045	2135	460	BA-2
28	1346	1346	-	-	-	-	-	-	-
32	1524	1524	-	-	-	-	-	-	-
36	1727	1727	-	-	-	-	-	-	-

EXPANDING GATE VALVE

- Cast Steel Slab Gate Valve, Double Expanding
- Outside Screw and York, Rising Stem,
- Double Block and Bleed, Self-relieving
- Imergency Sealing Injection System
- Designed to API 6D

Face to Face	ASME/ANSI B16.10
End Flange	ASME/ANSI B16.5
Butt Weld	ASME/ANSI B16.25
Class	ASME/ANSI CL400

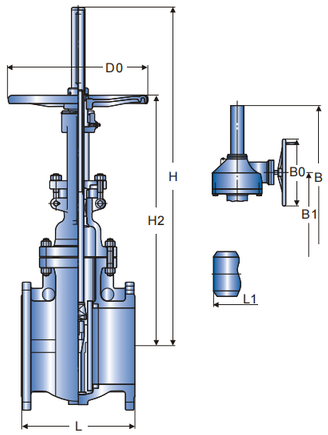

CLASS 400 DIMENSIONS

SIZE (in.)	FLG L	B.W L1	H	H2	D0	B	B1	B0	G.O SIZE
									Unit:mm
2	292	292	499	378	250	-	-	-	-
2-1/2	330	330	562	446	300	-	-	-	-
3	356	356	630	483	300	-	-	-	-
4	406	406	735	562	350	-	-	-	-
6	495	495	956	720	350	1096	805	305	BA-0
8	597	597	1150	856	400	1290	941	305	BA-0
10	673	673	1439	1013	500	1580	1098	305	BA-0
12	762	762	1545	1155	600	1705	1250	458	BA-1
14	826	826	1817	1313	650	1977	1408	458	BA-1
16	902	902	1965	1445	700	2125	1540	458	BA-1
18	978	978	2295	1560	800	2525	1700	458	BA-2
20	1054	1054	2452	1655	1000	2682	1795	458	BA-2
24	1232	1232	-	-	-	3186	2235	458	BA-2
28	1397	1397	-	-	-	-	-	-	-
32	1650	1650	-	-	-	-	-	-	-
36	1880	1880	-	-	-	-	-	-	-

OIL FIELD SLAB GATE VALVE

- Cast Steel Slab Gate Valve
- Outside Screw and York, Rising Stem,
- Double Block and Bleed, Self-relieving
- Emergence Sealing Injection System
- Designed to API 6D

Face to Face	ASME/ANSI B16.10
End Flange	ASME/ANSI B16.5
Butt Weld	ASME/ANSI B16.25
Class	ASME/ANSI CL150

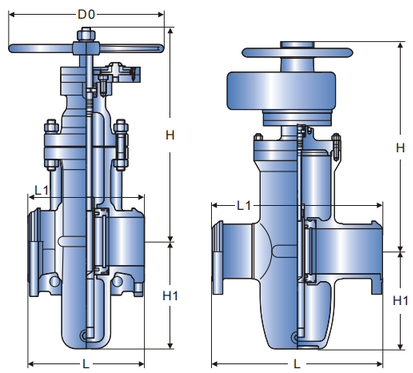

CLASS 150 DIMENSIONS

SIZE (in.)	FLG L	B.W L1	H1	H	D0	H1	H	D0	G.O SIZE
									Unit:mm
1	165	-	85	228	180	-	-	-	-
1-1/4	165	-	103	231	180	-	-	-	-
1-1/2	178	-	115	240	250	-	-	-	-
2	178	216	130	255	250	-	-	-	-
2-1/2	190	241	160	355	300	-	-	-	-
3	203	283	180	360	300	-	-	-	-
4	229	305	214	400	300	-	-	-	-
5	254	381	257	460	350	-	-	-	-
6	267	403	300	500	350	-	-	-	-
8	292	419	388	570	350	-	-	-	-
10	330	457	475	680	400	475	700	350	0
12	356	502	547	750	450	547	870	350	0
14	381	572	625	875	450	625	995	450	1
16	406	610	712	1000	500	712	1120	450	1
18	432	660	785	1130	500	785	1280	450	1
20	457	711	880	1200	600	880	1350	450	1
24	508	813	1045	1420	800	1045	1570	500	2
28	610	914	1190	1650	800	1190	1800	500	2
32	660	914	1360	1880	1000	1360	2040	500	2
36	771	1016	1510	2100	1000	1510	2280	600	3
40	811	-	1715	2300	1200	1715	2480	600	3

OIL FIELD SLAB GATE VALVE

- Cast Steel Slab Gate Valve
- Outside Screw and York, Rising Stem,
- Double Block and Bleed, Self-relieving
- Emergence Sealing Injection System
- Designed to API 6D

Face to Face	ASME/ANSI B16.10
End Flange	ASME/ANSI B16.5
Butt Weld	ASME/ANSI B16.25
Class	ASME/ANSI CL300

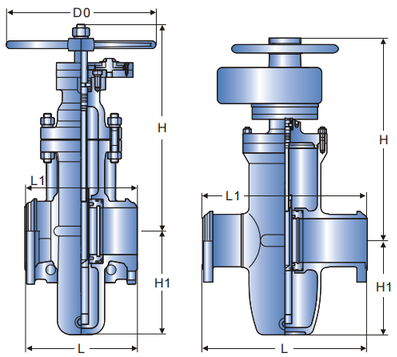

CLASS 300 DIMENSIONS

SIZE (in.)	FLG L	B.W L1	H1	H	D0	H1	H	D0	G.O SIZE
									Unit:mm
1	165	165	85	238	180	-	-	-	-
1-1/4	178	178	103	238	180	-	-	-	-
1-1/2	190	190	115	245	250	-	-	-	-
2	216	216	130	265	250	-	-	-	-
2-1/2	241	241	160	365	300	-	-	-	-
3	283	283	180	375	300	-	-	-	-
4	305	305	214	420	300	-	-	-	-
5	381	381	257	480	350	-	-	-	-
6	403	403	300	520	350	-	-	-	-
8	419	419	388	590	350	388	710	350	0
10	457	457	475	700	400	475	820	350	0
12	502	502	547	780	450	547	900	450	1
14	762	762	625	895	450	625	1015	450	1
16	838	838	712	1020	550	712	1150	450	1
18	914	914	785	1150	700	785	1300	500	2
20	991	991	880	1220	800	880	1370	500	2
24	1143	1143	1045	1440	1000	1045	1620	600	3

OIL FIELD SLAB GATE VALVE

- Cast Steel Slab Gate Valve
- Outside Screw and York, Rising Stem,
- Double Block and Bleed, Self-relieving
- Emergence Sealing Injection System
- Designed to API 6D

Face to Face	ASME/ANSI B16.10
End Flange	ASME/ANSI B16.5
Butt Weld	ASME/ANSI B16.25
Class	ASME/ANSI CL400

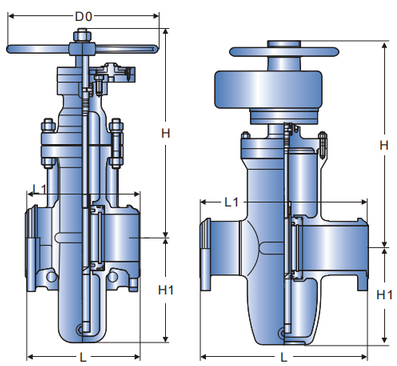

CLASS 400 DIMENSIONS

SIZE (in.)	FLG L	B.W L1	H1	H	D0	H1	H	D0	G.O SIZE
									Unit:mm
2	216	250	158	265	300	-	-	-	-
2-1/2	241	280	190	365	300	-	-	-	-
3	283	310	225	375	350	-	-	-	-
4	305	350	255	420	350	-	-	-	-
5	381	400	275	480	400	-	-	-	-
6	403	450	330	520	400	-	-	-	-
8	419	550	410	590	500	388	710	350	0
10	457	650	490	700	500	475	820	350	0
12	502	750	570	780	600	547	900	450	1
14	762	850	625	910	600	625	1015	450	1
16	838	950	735	1020	700	712	1150	450	1