DBV VALVE CO.,LTD

E-mail:info@dbv-armaturen.com

www.dbv-armaturen.com www.dombor.com

Tel: +86-577-67387723 Fax: +86-577-67383000

Add:No.98 Fanhua East Road,OuBei,WenZhou,Zhejiang,China

DBV Website linkedin instagram youtube facebook

This manual is printed on eco-paper!
Due to the continuous innovation of technology and process of "DBV" products, this information is for reference only.
Our company reserves the right of final interpretation.

Ball Valves
Product Catalogue

DBV VALVE CO.,LTD

CATALOG

DBV

DBV VALVE CO.,LTD

VALVE SOLUTION PROVIDER

Leader in the development of butterfly valves and ball valves

CE API-609 API-6D ATEX SIL-3 CU-TR ISO9001

DBV

Part One
About DBV

Premier Manufacturer of High-quality Custom Valves

DBV History:

DBV valve was founded in 2001.Our company created two valve brands "DBV" and "Dombor".

In 2017, the founder led the team to return to Oubei, the hometown of Chinese valves in Wenzhou, and set up the company headquarters of DBV in Wenzhou, and established professional sales and service networks in Shanghai and Wenzhou. The headquarters company has production workshops for butterfly valves, ball valves, gate valves, Globe Valves and check valves.

DBV Quality Control:

Advanced physical and chemical test center,professional CNC processing,pressure testing,automatic production facilities and experienced technical.production team.

achieving all kin ds of certificates such as
API6D,API609,API607,API6FA,CE,ISO9001,ISO158481,ISO14001,ISO45001,TS,ATEX,SIL3,CU-TR.....

DBV History

2001 - 2009

Gavin and Sea established DBV, an industrial valve brand for a wide business range in 2001. In the following years, we passed the ISO9001 quality management system certification by making our production capabilities compliant with global standards as well as passing TS-related certification.

2010 - 2016

The creation of our full series of hard-sealed butterfly valves was successfully developed during 2010-2011. In 2015, we produced our first ultra-high-pressure 1500# valve and the DN2600 (104 inches) large-diameter all-metal flange hard sealed butterfly valve.

2017 - 2019

In 2017, the company's leadership made a major decision to set Wenzhou as the headquarters of DBV and set up a sales team in Shanghai.The non-regional industry company DBV was established in Wenzhou in 2018.

This factory has 20,000 square meters of workspace, high-end processing equipment & testing equipment, and an established valve test center. Till 2019, the company achieved an annual output of 5,000 tons of valves, providing us with good economic benefits.

2020 - Now

In 2020, DBV obtained a series of national and international authoritative certifications such as the TS license for special equipment manufacturing, CE, API, and SIL3. Since 2020, we have actively responded to the global epidemic, ensuring production and providing high-quality products. DBV is always on the way to become a better industry leader.

Innovation for sustainability

DBV Valve continues to excel in trend-setting R&D and sustainability practices to Valve performance for every valve product.reduce costs and ensure optimal performance for every valve product.

have allowed us to earn numerous intellectual property rights and quality certifications.have allowed us to earn numerous intellectual property rights and quality certifications.

Professional Service

Providing constant our production cycle, our team also handles on-site technical training andhandles on-site technical

Production StrengthProduction Strength

With a factory employing 5With a factory employing 5 production lines and numerousproduction lines and numerous machines, we easily produce up to 8,000 tons of valves

Strict Quality Control

In conjunction with third party inspection, each valve is tested in a certified laboratory using advanced testing equipment prior to delivery.

R&D Capabilities R&D Capabilities

With over 15 years of experience, our team continues to provide the latest valve solutions with industry and market trends.

20 Y20 Years of ears of ExperienceExperience

Since 2001, we have been running an efficient production system, constantly innovating our valves to obtain efficient global resources.

Part Two
Quality Control

We Take Pride in Our High-Quality Work

Understanding how important product quality is to the success of a brand, DBV places a premium on maintaining high-quality standards in both our valves and our services.

Devoting human and financial resources, along with our commitment to quality, we always perform at our best to manufacture reliable valves that surpass global certification requirements.

DBV Valve

Making Things Better

Experienced Quality Inspection Team

With over 10 years of experience in the industry, our expert team of quality inspectors has the right skill set to ensure our valves pass global standards.

Professional Laboratory

Product and material testing is handled in-house via our testing laboratory, equipped with the latest testing equipment comparable to third-party professional facilities.

International Certificates

Conducting various tests and witness auditing,we have obtained most completely certificate: API 6D, API609,API607,API6FA,SIL3,CE,ISO9001, ISO18001,TS,CU-TR 010/032,ISO 15848-1(fugitive emission certificate).

Branded and Reliable Raw Materials

Carbon Steel
WCB, LCB, WCC, LC1, A105, LF2

Stainless Steel
CF8, CF8M, CF3, CF3M, 310S, 904L, F304, F316, F304L, F316L, CF8C, F347

Cr-mo Alloy
WC6, WC9, C5, C12A, F11, F22, F5, F91

Duplex Stainless Steel
4A, 5A, 6A, F51, F53, F55, CK3MCUN, CD4MCU, CK20

Copper Alloy
C95800, C95500, C83600

Monel Alloy
MONEL 400, MONEL 500, M35-1

Inconel Alloy
INCONEL600, INCONEL 625, INCONEL 800

Ti Alloy
TITANIUM GR2, GR3, GR5, GR12

Hast Alloy
HAST ALLOY C276

Key Part of Quality Management and Assurance

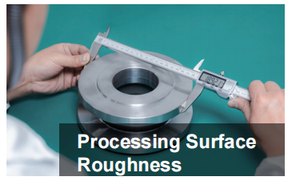

Part Three
Our Equipment

5
Production Lines

20000 ㎡
Manufacturing Area

8000tons
Annual Output

$32 Million
Total annual sales (US$)

Machinery for Highly Efficient Valve Production

52 Sets of CNC Machinesv

2.5-meter Vertical Lathe

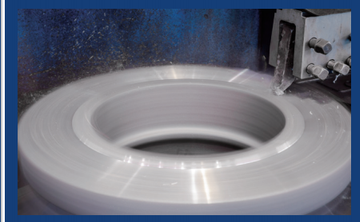

8 Sets of 1.6-meter Vertical Lathes

DBV Valve

DBV Capabilities at a Glance

A major pillar in our continued success as a global valve manufacturer is our fully-functional production facility, packed with state-of-the-art processing equipment and talented staff.

- Rough Machining
- Fine Machining
- Heat Treating
- Boring
- Surface Finishing
- Drilling

How We Handle Details Makes Us Different

The performance, durability, and service life of DBV industrial valves come from how we process and prepare each of our raw materials: properly, with great attention to detail.

Part Four
Our Parters

Win-Win Partnership

With a wide range of industrial valves, DBV can cooperate with any kind of client.

When you are constructing or forming a valve system, you need a specific solution for your project requirements. DBV can assist you with our full-service support as well as system maintenance programs for all of your orders.

To provide the right valve solutions for all your customers, you need a diverse range of industrial valves that fits their needs. Working with DBV gives you a rich selection of pump valves for any of your clients.

Benefits from Cooperation

Design Confirmation

Expert designers create practical valve designs based on the data acquired during the consultation, along with any special requirements you may have. The completed design is forwarded to you, ensuring that the design specifications capture your unique branding or marketing concepts.

After getting your approval, the design is then forwarded to our production team for sample making.

30-Day Lead Time

Customized valve orders take a maximum of 30 days for completion, including the prototyping phase.

For standard orders, OEM requests, or urgent purchases, our warehouse is packed with stock standard parts, allowing our team to complete your orders within 7 days from the date of your request.

Value-Added Delivery

As we value your business with us, we add free accessories to your purchase at the time of shipment, amounting to 10% of the total order amount.

Per request, we can also include additional documents to the shipment, like product parame-ters, test results, and other important information.

Responsive After-Sales Service

All valves from DBV come with a 24-month warranty period that covers technical assis-tance, on-site repairs, and free product replacements.

Professional aftersales team handles your concerns via email and video calls, while our on-site technical support staff are certified experts in the field and provide fast, effective solutions for any kind of issues.

东宝的阀门产品型号按照JB/T 308《阀门型号编制方法》的标准规范进行编制，同时根据行业惯例和产品特点进行调整。由于产品型号并不能完全反映出产品的所有特性，所以，对于特殊要求，建议用户以文字形式加以补充说明。

Pruduct model of DBV valves is coded according to standard JB/T 308"valves model designation method" and adjusted based on industry practises and product charactersitics. As the product model does not fully present overall characteristics of the products, for special requirements, it is recommended that the user shall supplement it by words

例 Example

举例 Sample	DN200	Q	3	4	7	F	-	25	P
编号 Code	I	II	III	IV	V	VI		VII	VIII

I	阀门规格 Valve Size	举例 Sample
NPS	配管公称尺寸 Nominal Pipe Size	NPS2, NPS3"
DN	公称尺寸 Nominal Size	DN50, DN80

II	阀门类型 Valve Type	
Q	球阀 Ball Valve	常规型 Normal
BQ		保温型 Insulated
DQ		低温型 Cryogenic (≤-29℃)
FQ		防火型 Fire Durabled
KQ		抗硫型 Resist SSC
PQ		排渣型 Slag Discharged
EQ		紧急切断型 Emergency Shut-off
WQ		波纹管型 Bellows Type
HQ		全焊接型 Full welded

III	驱动方式 Operated
1	手柄操作不标注 N/A for Lever Operated
2	电液联动 Electro-hydraulic Operated
3	蜗轮驱动 Worm-gear Operated
6	气动 Pneumatic Operated
6s	气动带手动 Pneumatic Operated with Manual
7	液动 Hydraulic Operated
7s	液动带手动 Hydraulic Operated with Manual
8	气液联动 Pneumatic-Hydraulic Operated
9	电动 General Electro Operated
9B	防爆电动 Explosion-Proof Electro Operated

IV	连接形式 Type of Connection
1	内螺纹 Female threaded End
2	外螺纹 Male thread End
4	法兰式 Flange End
6	焊接式 Welding End
7	对夹式 Wafer Type
8	卡箍式 Hooped End
9	卡套式 Compression Joint Type

V	结构形式 Type of Construction	
1	浮动球 Floating Ball	直通流道 Through-way flow path
2		Y形三通流道 Y-type 3 Way flow path
4		L形三通流道 L-type 3 Way flow path
5		T形三通流道 T-type 3 Way flow path

V	结构形式 Type of Construction	
7	固定球 Trunnion Ball	直通流道 Through-way flow path
6		四通流道 Four-way flow path
8		T形三通流道 T-type 3 Way flow path
9		L形三通流道 L-type 3 Way flow path
0		半球直通 Half-ball Through

VI	密封面材料 Material of Sealing Face
F	氟塑料 Fluorocarbon
G	陶瓷 Ceramic
H	13CR系不锈钢 Martensitic Stainless Steel
M	蒙乃尔合金 Monel Metal
N	尼龙塑料 Nylon
PK	聚醚醚酮 PEEK
PL	对位聚苯 PPL
T	铜合金 Copper Alloy
X	橡胶 Rubber
Y	硬质合金 Stellite Alloy

VII	压力代号 Pressure Code	举例 Sample
NPS	磅级 Class	150Lb, 300Lb,···
DN	公称压力数值的10倍=PN*10	16, 25,···

VIII	阀体材料 Material of Shell
C	碳钢(磅级及PN25以上不标注) Carbon Steel(class and up than PN 25 is not marked)
H	13CR系不锈钢 Martensitic SS
I	铬钼系钢 Chrome-Molybdenum steel
P	铬镍系不锈钢 Chromium-Nickel SS
R	铬镍钼系不锈钢 Chromium-Nickel-Molybdenum SS
T	铜及铜合金 Copper & Copper Alloy
Ti	钛及钛合金 Titanium & Titanium Alloy
V	铬钼钒系钢 Chrome-Molybdenum-Vanadium Steel

固定式球阀的结构设计特点 Construction and Features of Trunnion Ball Valve

密封脂紧急注射装置

根据用户要求，固定球阀可以设置密封脂紧急注射装置，对于DN150(NPS6)以上的固定球阀，在阀杆和阀座上均装有密封脂注射装置，当阀座密封圈或阀杆O型密封圈因意外事故损坏时，可通过密封脂注射装置注射密封脂，以防止介质通过阀座密封圈和阀杆的泄漏。

Urgent Grease Injection Device

According to customers' requirement, the trunnion ball valves made by company are provided with devices for urgentgrease injection, which are on both the stem and seat for the trunnion ball valves of DN>150mm (NPS6), and in the body cavity for the valve of DN<125mm. When the Oring of stem or the body seat ring is damaged due to accident, the medium leakage between body and stem can be prevented by injecting the sealing grease through the device.

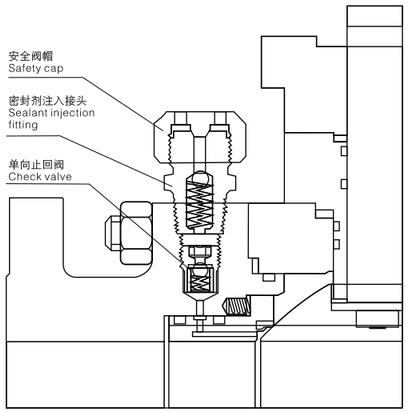

阀杆的防吹出结构设计

阀杆采用防吹出结构设计。下端大上端小的阀杆在上端盖和螺钉的定位下，即使在阀腔异常升压的情况下，也能保证阀杆不会被介质吹出。

Blow-out Proof Stem

Blow-out proof structure is provited with for the stem, which is positioned by the up-end cap and screw, being guaranteed not to be blown-out by the medium even if at abnormal risen pressure in the cavity.

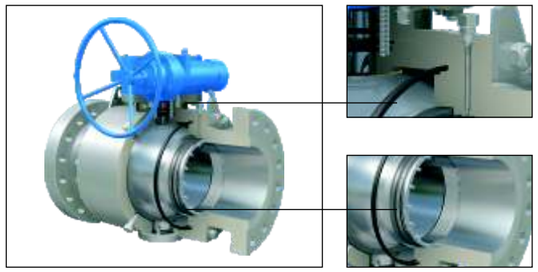

防火结构设计

在阀门的使用现场发生火灾时，当聚四氟乙烯，橡胶等非金属材料制作的阀座密封圈、阀杆的O型密封圈以及中法兰O型密封圈在高温下损坏后，东宝固定球阀能够借助于特别设计的金属对金属辅助密封结构或柔性石墨密封结构，有效地控制阀门的内漏和外漏。对于用户有防火要求的固定球阀，东宝公司的防火结构设计均符合API 607, API 6Fa, BS 6755 及JB/T 6899等标准规范的要求。

Fire Safe Design

With the valve heated in a fire application, the nonmetal material parts such as seat sealing ring of PTFE, O-ring for the stem, and sealing gasket for body and bonnet, might be damaged due to high temperature. DBV's special design of auxiliary metal to metal or the graphite seal is provited for the trunnion ball valve to effectively prevent both internal and external leakage of the valve. As required by customers, DBV 's fire safe design For the trunnion ball valve meets the requirement of API 607, API 6Fa, BS 6755 and JB/T 6899.

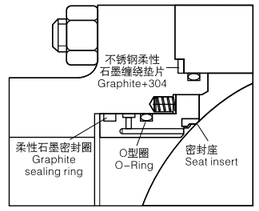

火烧前 Before Fire

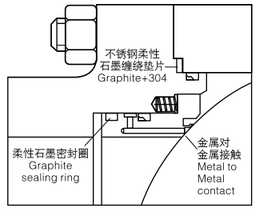

火烧后 After Fire

防静电设计

固定球阀通过防静电设计使球体、阀杆、阀体形成静电通道。从而可将球体与阀座开关过程中由于摩擦产生的静电通过阀体引到大地，防止静电火花可能引起的火灾或爆炸危险。

Anti-static Design

By anti-static design, the ball, stem and body of the trunnion mounted ball valve forms a static channel through which the static electricity caused in the switching process of ball and body will be guide to the ground. Thus it can prevent the valve from the potential fire and explosion risk.

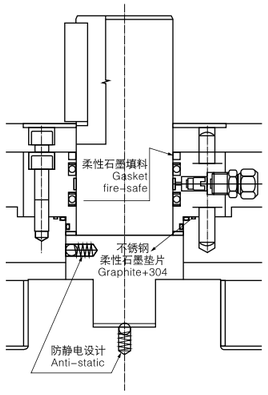

单活塞作用
Single piston effect

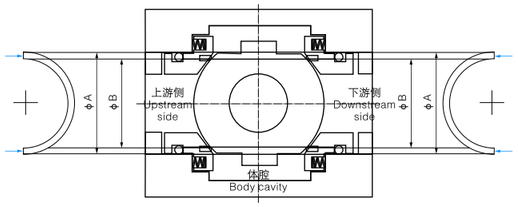

压力作用力在上游侧和/或下游侧
Pressure acting upstream and/or downstream

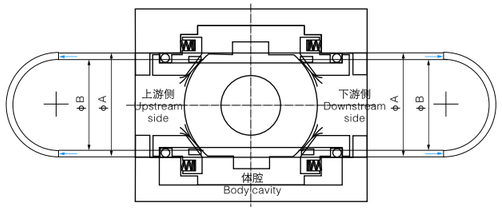

双活塞作用
Double piston effect

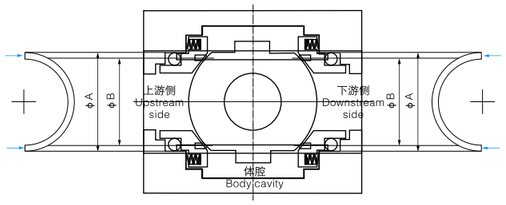

压力作用力在上游侧和/或下游侧
Pressure acting upstream and/or downstream

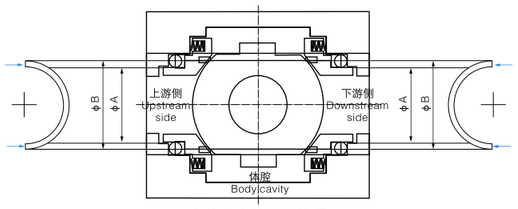

在体腔内的压力作用
Pressure acting in the body cavity

标准 单活塞作用(自泄压式阀座)

两边顺流和逆流的流体压力，创造了一个推力的合力，这个合力推阀座使其紧紧的靠紧球体。

流体压力在阀腔内的作用创造了一个推力的合力，这个合力推动阀座远离球体。

当阀门在全开和全关位置的时候，阀腔内有任何超压，单活塞设计都可以自动泄压。因此这种阀座圈叫做“自动泄压式”

Standard Single Piston Effect (self-relieving Seats)

Fluid pressure, both upstream and downstream, creates a resultant thrust that pushes the seat rings against the ball.

Fluid pressure acting in the body cavity creates a resultant thrust that pushes the seat rings away from the ball.

The single piston design permits the automatic release of any over pressure in the body cavity when the valve is in the fully open or fully closed position, therefore the seat rings are "self-relieving".

可选项 双活塞作用

进出口两端都有流体压力，也就是阀腔内创造了一个推力的合力，它推动阀座圈朝向球体。

阀门是双活塞作用的阀座圈就需要一个泄压阀，目的是减少阀腔内超压的出现。

Optional Double Piston Effect

Fluid pressure,both upstream and down-stream,as well as in the body cavity creates a resultant thrust that pushes the seat rings towards the ball.

Valves with double piston effect seat rings require a relief valve in order To reduce the build-up of over pressure in the body cavity.

驱动装置安装平台的设置

固定球阀均设置了安装驱动装置的支架平台，可以方便的安装蜗轮蜗杆传动装置、气动装置、电动装置、液动装置以及气液动装置等。

Mounting Pad Provided

Has provided for trunnion ball valve with amounting pad for fixing the actuators, such as worm gear, pneumatic, electric, hydraulic, and pneumatic & hydraulic acturtors.

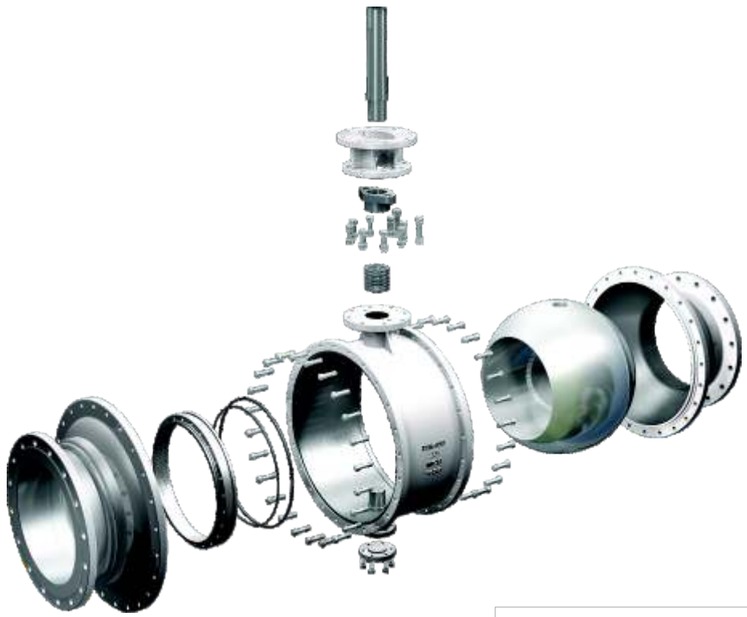

技术规范 Technical Specifications

设计依据 Design Basis		GB		API		ASME
设计标准 Design Standard		GB/T 12237	GB/T 19672	API 608	API 6D	ASME B16.34
结构长度 Face-to-Face		GB/T 12221	GB/T 19672	ASME B16.10	API 6D	ASME B16.10
连接端* Connection End	法兰连接 Flanged	GB/T 9113		ASME B16.5/MSS SP-44/ASME B16.47[a]		
	对焊连接 Butt-Welding	GB/T 12224		ASME B16.25		
材料要求 Material		NACE MR0175				
试验和检验 Test and Inspection		JB/T 9092	GB/T 19672	API 598	API 6D	ASME B16.34
耐火试验 Fire Test		JB/T 6899		API 6FA/API 607		

* 阀门连接端对焊端尺寸可按用户要求设计制造。
The dimension of welded end connection can be designed and manufactured according to the buyers's request.

a.MSS SP-44 for size 22.
ASME B16.47 Series A for size 26 & over.

主要零件与材质 Main Parts and Materials

常规型 Conventional Type

零件名称 Part Name	碳钢 Carbon Steel		低温钢, Low Temp. Steel		不锈钢 Stainless Steel	
	GB	ASTM	GB	ASTM	GB	ASTM
阀体 Body	WCB	A216-WCB	LCB LCC	A352-LCB A352-LCC	CF8 CF8M	A351-CF8 A351-CF8M
螺栓/螺母 Bolt/Nut	35CrMo 45	A193-B7 A194-2H	304 304	A320-L7 A194-4	304 304	A193-B8 A194-8
球体 Ball	25+ENP	A105+ENP	0Cr18Ni9	A350-LF2+ENP	0Cr18Ni9 00Cr17Ni12Mo2	A182-F304 A182-F316
阀杆 Stem	1Cr13 2Cr13	A276-410 A276-420	304	A350-LF2 A276-304	304 316	A276-304 A276-316
阀座 Seat	25+ENP	A105+ENP	304	A350 LF2+ENP	0Cr18Ni9 00Cr17Ni12Mo2	A182-F304 A182-F316
阀座密封圈 Seat insert	Standard: PTFE/NYLON Special: PEEK/DEVLON/VITON		Standard: PTFE/NYLON Special: PEEK/DEVLON/VITON		Standard: PTFE/NYLON Special: PEEK/DEVLON/VITON	
O型圈 O-Ring	NBR OR VITON		NBR OR VITON		VITON	
垫片 Gasket	柔性石墨+不锈钢 Graphite+ Stainless steel		柔性石墨+不锈钢 Graphite+ Stainless steel		柔性石墨+不锈钢 Graphite+ Stainless steel	

主要零件与材质 Main Parts and Materials

抗硫型：Sulfur-resisting type

零件名称 Part Name	碳钢 Carbon Steel		低温钢, Low Temp. Steel		不锈钢 Stainless Steel	
	GB	ASTM	GB	ASTM	GB	ASTM
阀体 Body	WCB	A216-WCB	LCB LCC	A352-LCB A352-LCC	CF8 CF8M	A351-CF8 A351-CF8M
螺栓/螺母 Bolt/Nut	35CrMo 45	A193-B7 A194-2H	304 304	A320-L7 A194-4	304 304	A193-B8 A194-8
球体 Ball	25+ENP	A105+ENP	0Cr18Ni9	A350-LF2+ENP	0Cr18Ni9 00Cr17Ni12Mo2	A182-F304 A182-F316
阀杆 Stem	17-4PH		For use at low temperatures resilient steels.		304 316	A276-304 A276-316
阀座 Seat	25+ENP	A105+ENP	304	A350 LF2+ENP	0Cr18Ni9 00Cr17Ni12Mo2	A182-F304 A182-F316
阀座密封圈 Seat insert	Standard: PTFE/NYLON Special: PEEK/DEVLON/VITON		Standard: PTFE/NYLON Special: PEEK/DEVLON/VITON		Standard: PTFE/NYLON Special: PEEK/DEVLON/VITON	
O型圈 O-Ring	NBR OR VITON		NBR OR VITON		VITON	
垫片 Gasket	柔性石墨+不锈钢 Graphite+ Stainless steel		柔性石墨+不锈钢 Graphite+ Stainless steel		柔性石墨+不锈钢 Graphite+ Stainless steel	

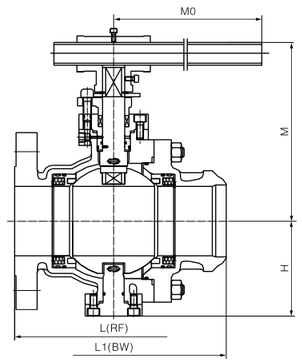

手动操作，MA
Lever-Operated

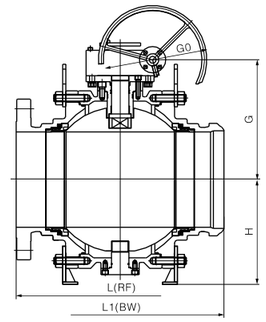

蜗轮传动操作，GA
Worm Gear Operated

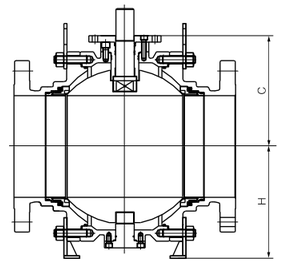

光杆带配盘，BSMP
Bare Stem with Mounting Pad

主要外形尺寸 Main External Dimensions

Class 150

全通径 Full Bore　　单位Unit：mm

DN	NPS	L (RF)	L1 (BW)	手柄 MA		蜗轮传动 GA		C	H	WT(Kg)	Torque (N·M)
				M	M0	G	G0				
50	2	178	216	168	250	--	--	115	85	10	57
65	$2^1/_2$	191	241	175	300	--	--	135	98	14	71
80	3	203	283	186	350	--	--	165	117	22	95
100	4	229	305	225	450	235	280	220	141	35	192
150	6	394	457	330	800	280	300	260	193	75	485
200	8	457	521	370	1000	398	400	300	240	111	832
250	10	533	559	--	--	495	400	350	293	217	1105
300	12	610	635	--	--	530	500	370	340	385	1655
350	14	686	762	--	--	580	500	400	372	457	2695
400	16	762	838	--	--	602	600	450	412	739	3164
450	18	864	914	--	--	640	600	510	462	930	3793
500	20	914	991	--	--	700	600	550	511	1657	5500
550	22	991	1092	--	--	740	600	580	556	2568	6650
600	24	1067	1143	--	--	823	700	650	601	2887	7529
650	26	1143	1245	--	--	895	700	700	700	3376	8693
700	28	1245	1346	--	--	906	700	720	780	4183	10770
750	30	1295	1397	--	--	968	700	770	800	4705	12365
800	32	1372	1524	--	--	1048	700	800	840	5735	14070
850	34	1473	1626	--	--	1098	700	830	860	6573	21148
900	36	1524	1727	--	--	1118	700	885	880	7537	22987
1000	40	1753	1956	--	--	1285	700	950	930	9848	26059
1050	42	1855	2083	--	--	1340	800	1000	960	11355	28149
1200	48	2134	2388	--	--	1435	800	1130	1070	17210	42776
1400	56	2489	2489	--	--	1478	800	1320	1250	26822	65654
1500	60	2640	2640	--	--	1560	1000	1400	1300	37822	85654
1600	64	--	--	--	--	--	--	--	--	--	--

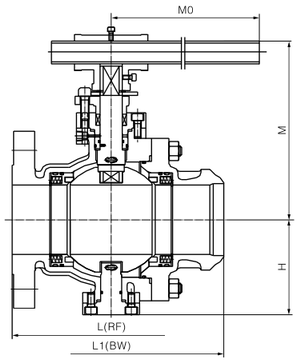

手动操作，MA
Lever-Operated

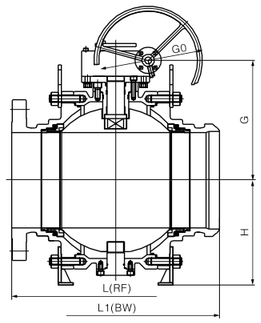

蜗轮传动操作，GA
Worm Gear Operated

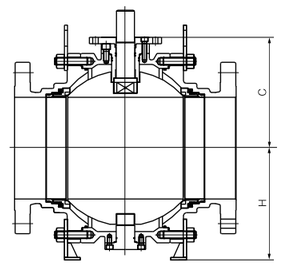

光杆带配盘，BSMP
Bare Stem with Mounting Pad

主要外形尺寸 Main External Dimensions

PN16/PN20/Class150

缩径 Reduced Bore　　单位Unit：mm

DN×DN'	NPS×NPS'	L (RF)	L1 (BW)	手柄 MA		蜗轮传动 GA		C	H	WT(Kg)	Torque (N·M)
				M	M0	G	G0				
50×40	2×1 1/2	178	216	150	250	--	--	110	85	8.5	40
80×50	3×2	203	283	168	250	--	--	115	85	11.7	57
100×80	4×3	229	305	186	350	--	--	165	117	25	95
150×100	6×4	394	457	225	450	235	280	220	141	42.5	192
200×150	8×6	457	521	330	800	280	300	260	193	83	485
250×200	10×8	533	559	370	1000	398	400	300	240	123.4	832
300×250	12×10	610	635	--	--	495	400	350	293	235	1105
350×250	14×10	686	762	--	--	495	400	350	293	263	1105
350×300	14×12	686	762	--	--	530	500	370	340	405	1655
400×300	16×12	762	838	--	--	530	500	370	340	446	1655
400×350	16×14	762	838	--	--	580	500	400	372	491	2695
450×350	18×14	864	914	--	--	580	500	400	372	515	2695
450×400	18×16	864	914	--	--	602	600	450	412	778	3164
500×400	20×16	914	991	--	--	602	600	450	412	865	3164
500×450	20×18	914	991	--	--	640	600	510	462	1030	3793
600×500	24×20	1067	1143	--	--	700	600	550	511	1900	5500
750×600	30×24	1295	1397	--	--	823	700	650	601	3089	7529
900×750	36×30	1524	1727	--	--	968	700	770	800	3985	12365

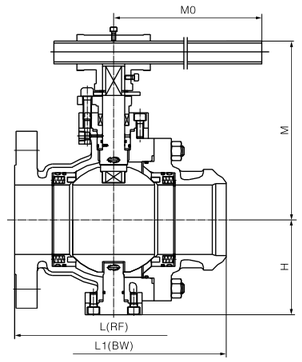

手动操作，MA
Lever-Operated

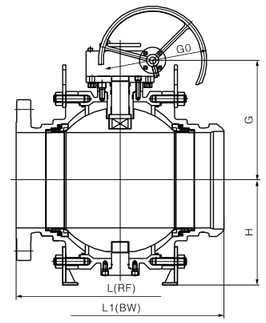

蜗轮传动操作，GA
Worm Gear Operated

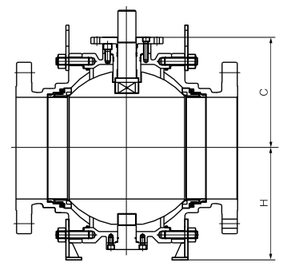

光杆带配盘，BSMP
Bare Stem with Mounting Pad

主要外形尺寸 Main External Dimensions

PN25/PN40/PN50/Class300

全通径 Full Bore　　单位Unit：mm

DN	NPS	L (RF)	L1 (BW)	手柄 MA		蜗轮传动 GA		C	H	WT(Kg)	Torque (N·M)
				M	M0	G	G0				
50	2	216	216	168	250	--	--	115	85	15	99
65	2 1/2	241	241	175	300	--	--	135	98	24	124
80	3	283	283	186	350			165	117	30	212
100	4	305	305	225	450	235	280	220	141	55	335
150	6	457	457	330	800	285	300	260	193	90	544
200	8	502	521	370	1000	398	400	300	240	201	1250
250	10	568	559	--	--	495	400	350	293	350	1736
300	12	648	635	--	--	530	500	370	340	510	2388
350	14	762	762	--	--	580	500	400	372	720	3224
400	16	838	838	--	--	602	600	450	412	1330	5139
450	18	914	914	--	--	640	600	510	462	1602	7970
500	20	991	991	--	--	712	600	562	511	1988	10570
550	22	1092	1092	--	--	799	600	620	556	2557	12140
600	24	1143	1143	--	--	826	700	656	601	3258	17240
650	26	1245	1245	--	--	895	700	700	700	3720	20340
700	28	1346	1346	--	--	906	700	720	780	4261	25069
750	30	1397	1397	--	--	968	700	770	800	5423	27640
800	32	1524	1524	--	--	1048	700	800	840	6558	29550
850	34	1626	1626	--	--	1098	700	830	860	7323	31558
900	36	1727	1727	--	--	1118	700	885	880	8254	35170
1000	40	1956	1956	--	--	1285	700	950	930	10577	39115
1050	42	2083	2083	--	--	1340	800	1000	960	12425	42414
1200	48	2170	2170	--	--	1435	800	1130	1070	19467	71868
1400	56	2743	2743	--	--	1490	1000	1325	1250	30825	108550

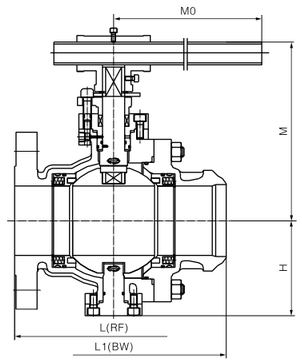

手动操作，MA
Lever-Operated

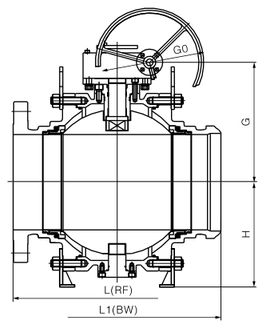

蜗轮传动操作，GA
Worm Gear Operated

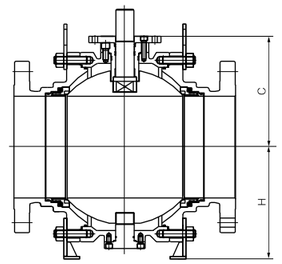

光杆带配盘，BSMP
Bare Stem with Mounting Pad

主要外形尺寸 Main External Dimensions

PN25/PN40/PN50/Class300

缩径 Reduced Bore　　单位Unit：mm

DN×DN'	NPS×NPS'	L (RF)	L1 (BW)	手柄 MA		蜗轮传动 GA		C	H	WT(Kg)	Torque (N·M)
				M	M0	G	G0				
50×40	2×1 1/2	216	216	150	250	--	--	110	85	13	50
80×50	3×2	283	283	168	250	--	--	115	85	20	99
100×80	4×3	305	305	186	350	--	--	165	117	44	212
150×100	6×4	457	457	225	450	235	280	220	141	65	335
200×150	8×6	502	521	330	800	285	300	260	193	107	544
250×200	10×8	568	559	370	1000	398	400	300	240	222	1250
300×250	12×10	648	635	--	--	495	400	350	293	385	1736
350×250	14×10	762	762	--	--	495	400	350	293	430	1736
350×300	14×12	762	762	--	--	530	500	370	340	550	2388
400×300	16×12	838	838	--	--	530	500	370	340	598	2388
400×350	16×14	838	838	--	--	580	500	400	372	760	3224
450×350	18×14	914	914	--	--	580	500	400	372	810	3224
450×400	18×16	914	914	--	--	602	600	450	412	1450	5139
500×400	20×16	991	991	--	--	602	600	450	412	1550	5139
500×450	20×18	991	991	--	--	640	600	510	462	1759	7970
600×500	24×20	1143	1143	--	--	712	600	562	511	2365	10570
750×600	30×24	1397	1397	--	--	826	700	656	601	4045	17240
900×750	36×30	1727	1727	--	--	968	700	770	800	6381	27640

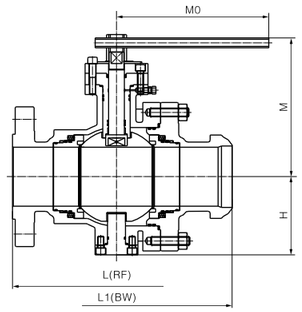

手动操作，MA
Lever-Operated

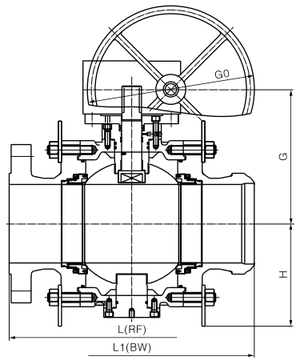

蜗轮传动操作，GA
Worm Gear Operated

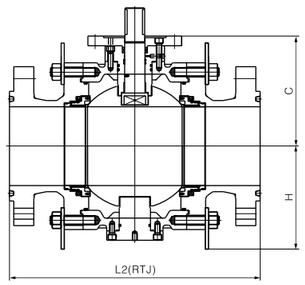

光杆带配盘，BSMP
Bare Stem with Mounting Pad

主要外形尺寸 Main External Dimensions

PN63/PN64/Class400

全通径 Full Bore　　单位Unit：mm

DN	NPS	L (RF)	L1 (BW)	L2 (RTJ)	手柄 MA		蜗轮传动 GA		C	H	WT(Kg)	Torque (N·M)
					M	M0	G	G0				
50	2	292	292	295	161	500	--	--	103	100	33	124
65	2 1/2	330	330	333	178	600	--	--	115	112	47	155
80	3	356	356	359	189	700	--	--	129	130	58	265
100	4	406	406	410	225	800	--	--	147	151	75	467
150	6	495	495	498	330	800	261	400	194	201	162	650
200	8	597	597	600	--	--	319	400	252	254	325	1806
250	10	673	673	676	--	--	369	500	303	308	440	2638
300	12	762	762	765	--	--	512	500	424	368	735	2929
350	14	826	826	829	--	--	537	500	450	382	985	3971
400	16	902	902	905	--	--	629	500	528	453	1440	6307
450	18	978	978	981	--	--	665	600	564	489	1710	9165
500	20	1054	1054	1060	--	--	762	600	641	562	2150	12155
550	22	1143	1143	1153	--	--	801	600	680	600	3228	15175
600	24	1232	1232	1241	--	--	837	600	716	636	3962	21550
650	26	1308	1308	1321	--	--	872	700	752	673	4740	25426
700	28	1397	1397	1410	--	--	907	700	787	708	5333	31336
750	30	1524	1524	1537	--	--	949	800	829	750	6240	34550
800	32	1651	1651	1667	--	--	1050	800	915	822	7410	36937
850	34	1778	1778	1794	--	--	1151	800	998	894	8150	39447
900	36	1880	1880	1895	--	--	1192	800	1039	935	9218	43962
1000	40	2250	2250	--	--	--	1276	800	1124	1020	12580	48894
1050	42	--	--	--	--	--	1318	800	1166	1061	16602	50300
1200	48	--	--	--	--	--	1508	1000	1372	1219	22583	80302

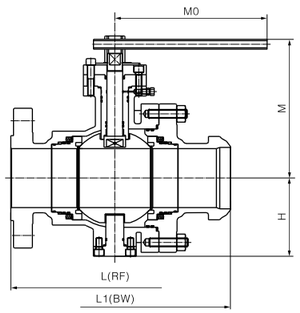

手动操作，MA
Lever-Operated

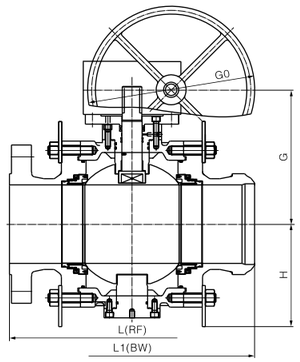

蜗轮传动操作，GA
Worm Gear Operated

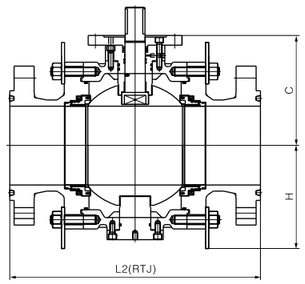

光杆带配盘，BSMP
Bare Stem with Mounting Pad

主要外形尺寸 Main External Dimensions

PN63/PN64/Class400

缩径 Reduced Bore　　单位Unit：mm

DN×DN'	NPS×NPS'	L (RF)	L1 (BW)	L2 (RTJ)	手柄 MA		蜗轮传动 GA		C	H	WT(Kg)	Torque (N·M)
					M	M0	G	G0				
50×40	2×1 1/2	292	292	295	150	400	--	--	100	100	33	98
80×50	3×2	356	356	359	161	500	--	--	103	100	37	124
100×80	4×3	406	406	410	189	700	--	--	129	130	58	265
150×100	6×4	495	495	498	225	800	--	--	147	151	85	467
200×150	8×6	597	597	600	330	800	261	400	194	201	158	650
250×200	10×8	673	673	676	--	--	319	400	252	254	310	1806
300×250	12×10	762	762	765	--	--	369	500	303	308	470	2638
350×250	14×10	826	826	829	--	--	369	500	303	308	510	2638
350×300	14×12	826	826	829	--	--	512	500	424	368	780	2929
400×300	16×12	902	902	905	--	--	512	500	424	368	850	2929
400×350	16×14	902	902	905	--	--	537	500	450	382	1055	3971
450×350	18×14	978	978	981	--	--	537	500	450	382	1158	3971
450×400	18×16	978	978	981	--	--	629	500	528	453	1580	6307
500×400	20×16	1054	1054	1060	--	--	629	500	528	453	1665	6307
500×450	20×18	1054	1054	1060	--	--	665	600	564	489	1900	9165
600×500	24×20	1232	1232	1241	--	--	762	600	641	562	2800	12155
750×600	30×24	1524	1524	1537	--	--	837	600	716	636	4158	21550
900×750	36×30	1880	1880	1895	--	--	949	800	829	750	6900	34550

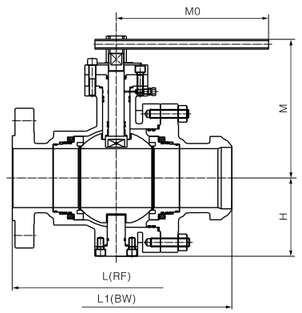

手动操作，MA
Lever-Operated

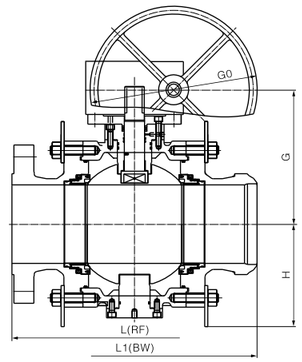

蜗轮传动操作，GA
Worm Gear Operated

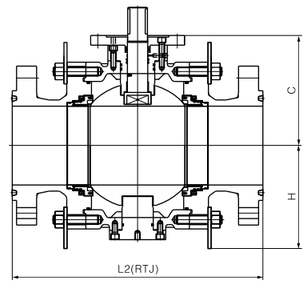

光杆带配盘，BSMP
Bare Stem with Mounting Pad

主要外形尺寸 Main External Dimensions

PN100/PN110/Class600

全通径 Full Bore　　单位Unit：mm

DN	NPS	L (RF)	L1 (BW)	L2 (RTJ)	手柄 MA		蜗轮传动 GA		C	H	WT(Kg)	Torque (N·M)
					M	M0	G	G0				
50	2	292	292	295	195	500	--	--	105	100	33	168
65	2 1/2	330	330	333	220	600	--	--	135	115	47	210
80	3	356	356	359	247	700	220	300	165	130	58	360
100	4	432	432	435	275	800	254	400	210	162	83	572
150	6	559	559	562	--	--	360	400	253	203	180	912
200	8	660	660	664	--	--	390	400	290	257	340	2177
250	10	787	787	791	--	--	450	500	333	310	530	3093
300	12	838	838	841	--	--	500	500	380	350	960	4282
350	14	889	889	892	--	--	520	500	395	360	1250	7458
400	16	991	991	994	--	--	550	500	433	413	1549	9310
450	18	1092	1092	1095	--	--	635	600	470	430	1830	14693
500	20	1194	1194	1200	--	--	675	600	505	490	2320	20011
550	22	1295	1295	1305	--	--	728	600	545	510	3899	24785
600	24	1397	1397	1407	--	--	780	600	595	570	4665	31226
650	26	1448	1448	1461	--	--	810	700	635	620	5751	35184
700	28	1549	1549	1562	--	--	840	700	665	690	6405	38987
750	30	1651	1651	1664	--	--	870	800	710	750	7056	41832
800	32	1778	1778	1794	--	--	915	800	755	780	8253	63865
850	34	1930	1930	1946	--	--	951	800	780	815	8978	71720
900	36	2083	2083	2099	--	--	987	1000	815	840	10182	89020
1000	40	2337	2337	2366	--	--	1212	1000	915	940	14584	109900
1050	42	2439	2439	2467	--	--	1292	1000	970	980	20779	121165
1200	48	2540	2540	2540	--	--	1440	1000	1105	1120	25699	145345
1400	56	2949	2949	2949	--	--	1600	1000	1300	1290	35700	169230

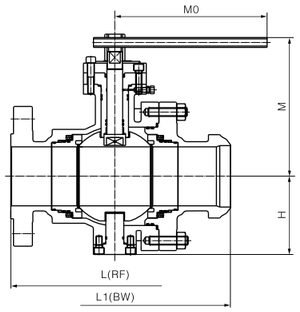

手动操作，MA
Lever-Operated

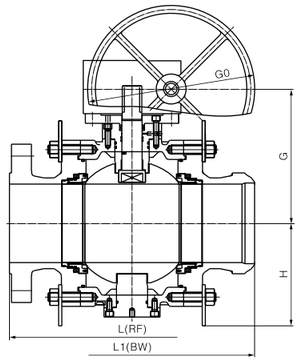

蜗轮传动操作，GA
Worm Gear Operated

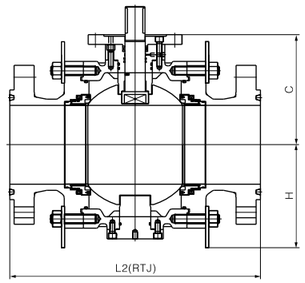

光杆带配盘，BSMP
Bare Stem with Mounting Pad

主要外形尺寸 Main External Dimensions

PN100/PN110/Class600

缩径 Reduced Bore　　单位Unit：mm

DN×DN'	NPS×NPS'	L (RF)	L1 (BW)	L2 (RTJ)	手柄 MA		蜗轮传动 GA		C	H	WT(Kg)	Torque (N·M)
					M	M0	G	G0				
50×40	2×1 1/2	292	292	295	182	500	--	--	105	100	33	130
80×50	3×2	356	356	359	195	500	--	--	105	100	37	168
100×80	4×3	432	432	435	247	700	220	300	165	130	72	360
150×100	6×4	559	559	562	275	800	254	400	210	162	103.5	572
200×150	8×6	660	660	664	--	--	360	400	253	203	208	912
250×200	10×8	787	787	791	--	--	390	400	290	257	396	2177
300×250	12×10	838	838	841	--	--	450	500	333	310	555	3093
350×250	14×10	889	889	892	--	--	450	500	333	310	586	3093
350×300	14×12	889	889	892	--	--	500	500	380	350	998	4282
400×300	16×12	991	991	994	--	--	500	500	380	350	1082	4282
400×350	16×14	991	991	994	--	--	520	500	395	360	1328	7458
450×350	18×14	1092	1092	1095	--	--	520	500	395	360	1425	7458
450×400	18×16	1092	1092	1095	--	--	550	500	433	413	1695	9310
500×400	20×16	1194	1194	1200	--	--	550	500	433	413	1778	9310
500×450	20×18	1194	1194	1200	--	--	635	600	470	430	2035	14693
600×500	24×20	1397	1397	1407	--	--	675	600	505	490	3235	20011
750×600	30×24	1651	1651	1664	--	--	780	600	595	570	4270	31226
900×750	36×30	2083	2083	2099	--	--	870	800	710	750	7420	41832

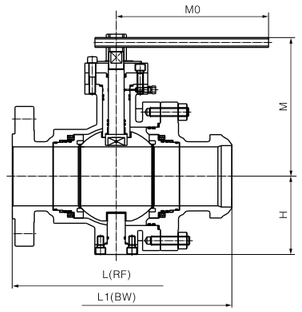

手动操作，MA
Lever-Operated

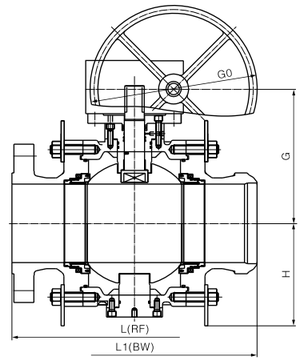

蜗轮传动操作，GA
Worm Gear Operated

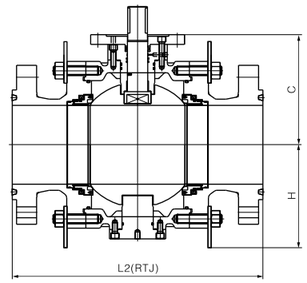

光杆带配盘，BSMP
Bare Stem with Mounting Pad

主要外形尺寸 Main External Dimensions

PN150/PN160/Class900

全通径 Full Bore　　单位Unit：mm

DN	NPS	L (RF)	L1 (BW)	L2 (RTJ)	手柄 MA		蜗轮传动 GA		C	H	WT(Kg)	Torque (N·M)
					M	M0	G	G0				
50	2	368	368	371	217	650	--	--	105	110	39	228
65	2 1/2	419	419	422	241	650	--	--	135	118	55	263
80	3	381	381	384	259	800	255	400	165	130	68	512
100	4	457	457	460	--	--	285	400	210	167	98	946
150	6	610	610	613	--	--	370	400	260	251	220	1784
200	8	737	737	740	--	--	410	500	305	280	500	4116
250	10	838	838	841	--	--	480	500	368	340	942	5910
300	12	965	965	968	--	--	525	500	405	390	1200	10137
350	14	1029	1029	1038	--	--	545	500	425	442	1655	14141
400	16	1130	1130	1140	--	--	580	600	470	490	1998	18866
450	18	1219	1219	1232	--	--	625	600	505	500	2415	22400
500	20	1321	1321	1334	--	--	666	600	560	500	3135	28544
550	22	--	--	--	--	--	--	--	--	--	--	--
600	24	1549	1549	1568	--	--	835	700	640	630	5495	43276
650	26	1651	1651	1673	--	--	875	700	668	650	6565	48580
700	28	1753	1753	1775	--	--	930	800	700	710	7735	60000
750	30	1880	1880	1902	--	--	1005	1000	750	780	8946	76000
800	32	2032	2032	2054	--	--	1275	1000	800	810	10568	90195
850	34	2159	2159	2188	--	--	1315	1000	835	850	14550	100460
900	36	2286	2286	2315	--	--	1340	1000	880	900	15572	131875

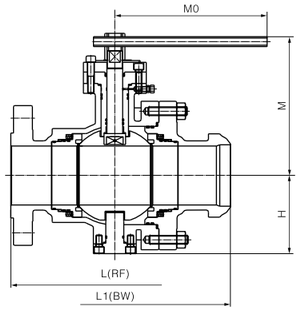

手动操作，MA
Lever–Operated

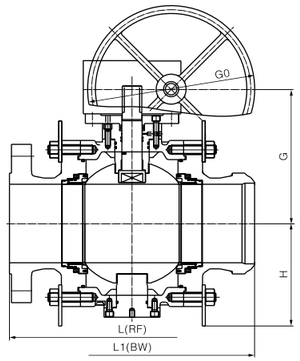

蜗轮传动操作，GA
Worm Gear Operated

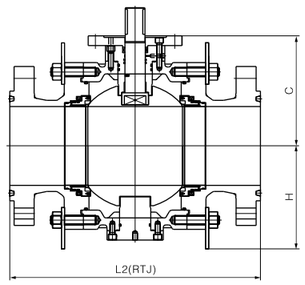

光杆带配盘，BSMP
Bare Stem with Mounting Pad

主要外形尺寸 Main External Dimensions

PN150/PN160/Class900

缩径 Reduced Bore　　单位Unit：mm

DN×DN'	NPS×NPS'	L (RF)	L1 (BW)	L2 (RTJ)	手柄 MA		蜗轮传动 GA		C	H	WT(Kg)	Torque (N·M)
					M	M0	G	G0				
50×40	2×1 1/2	368	368	371	206	650	--	--	100	108	35	163
80×50	3×2	381	381	384	217	650	--	--	105	110	44	228
100×80	4×3	457	457	460	259	800	255	400	165	130	82	512
150×100	6×4	610	610	613	--	--	285	400	210	167	127	946
200×150	8×6	737	737	740	--	--	370	400	260	251	263	1784
250×200	10×8	838	838	841	--	--	410	500	305	280	551	4116
300×250	12×10	965	965	968	--	--	480	500	368	340	1010	5910
350×250	14×10	1029	1029	1038	--	--	480	500	368	340	1184	5910
350×300	14×12	1029	1029	1038	--	--	525	500	405	390	1380	10137
400×300	16×12	1130	1130	1140	--	--	525	500	405	390	1560	10137
400×350	16×14	1130	1130	1140	--	--	545	500	425	442	1855	14141
450×350	18×14	1219	1219	1232	--	--	545	500	425	442	1960	14141
450×400	18×16	1219	1219	1232	--	--	580	600	470	490	2130	18866
500×400	20×16	1321	1321	1334	--	--	580	600	470	490	2495	18866
500×450	20×18	1321	1321	1334	--	--	625	600	505	500	2730	22400
600×500	24×20	1549	1549	1568	--	--	666	600	560	500	3995	28544
750×600	30×24	1880	1880	1902	--	--	835	700	640	630	7200	43276
900×750	36×30	2286	2286	2315	--	--	1005	1000	750	780	10778	76000

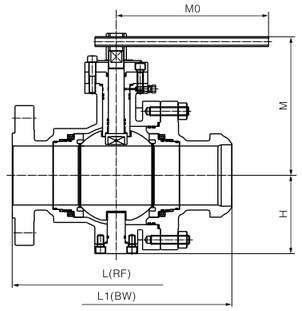

手动操作，MA
Lever–Operated

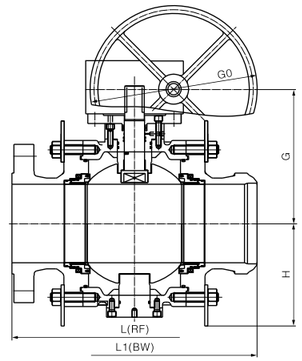

蜗轮传动操作，GA
Worm Gear Operated

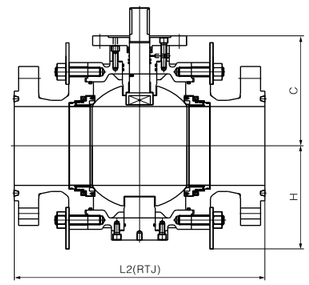

光杆带配盘，BSMP
Bare Stem with Mounting Pad

主要外形尺寸 Main External Dimensions

PN250/PN260/Class1500

全通径 Full Bore　　单位Unit：mm

DN	NPS	L (RF)	L1 (BW)	L2 (RTJ)	手柄 MA		蜗轮传动 GA		C	H	WT(Kg)	Torque (N·M)
					M	M0	G	G0				
50	2	368	368	371	237	800	--	--	105	105	40	390
65	2 1/2	419	419	422	261	800	--	--	138	120	63	448
80	3	470	470	473	269	1000	255	500	165	130	95	931
100	4	546	546	549	297	1000	285	500	215	167	180	1524
150	6	705	705	711	--	--	460	500	260	270	400	2934
200	8	832	832	841	--	--	520	500	300	300	750	7215
250	10	991	991	1000	--	--	640	500	365	360	1165	10990
300	12	1130	1130	1146	--	--	720	500	420	423	1725	16103
350	14	1257	1257	1276	--	--	760	500	440	460	2080	24518
400	16	1384	1384	1407	--	--	820	600	480	510	3718	29630
450	18	1537	1537	1559	--	--	880	600	550	600	5065	34392
500	20	1664	1664	1686	--	--	900	700	620	650	7612	40918
550	22	--	--	--	--	--	--	--	--	--	--	--
600	24	--	--	1972	--	--	920	800	700	720	11387	65351

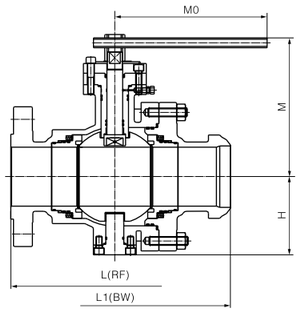

手动操作，MA
Lever-Operated

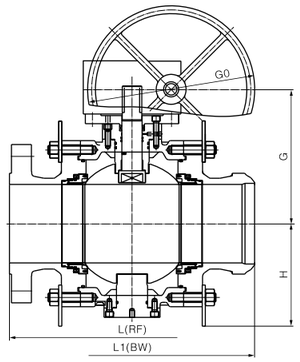

蜗轮传动操作，GA
Worm Gear Operated

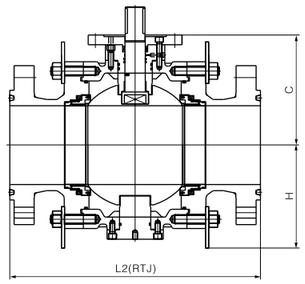

光杆带配盘，BSMP
Bare Stem with Mounting Pad

主要外形尺寸 Main External Dimensions

PN250/PN260/Class1500

缩径 Reduced Bore　　单位Unit：mm

DN×DN'	NPS×NPS'	L (RF)	L1 (BW)	L2 (RTJ)	手柄 MA		蜗轮传动 GA		C	H	WT(Kg)	Torque (N·M)
					M	M0	G	G0				
50×40	2×1 1/2	368	368	371	230	700	--	--	105	105	36	181
80×50	3×2	470	470	473	237	800	--	--	105	105	50	390
100×80	4×3	546	546	549	269	1000	255	500	165	130	108	931
150×100	6×4	705	705	711	297	1000	285	500	215	167	225	1524
200×150	8×6	832	832	841	--	--	460	500	260	270	485	2934
250×200	10×8	991	991	1000	--	--	520	500	300	300	966	7215
300×250	12×10	1130	1130	1146	--	--	640	500	365	360	1267	10990
350×250	14×10	1257	1257	1276	--	--	640	500	365	360	1465	10990
350×300	14×12	1257	1257	1276	--	--	720	500	420	423	1825	16103
400×300	16×12	1384	1384	1407	--	--	720	500	420	423	1900	16103
400×350	16×14	1384	1384	1407	--	--	760	500	440	460	2280	24518
450×350	18×14	1537	--	1559	--	--	760	500	440	460	2795	24518
450×400	18×16	1537	--	1559	--	--	820	600	480	510	4720	29630
500×400	20×16	1664	--	1686	--	--	820	600	480	510	5052	29630
500×450	20×18	1664	--	1686	--	--	880	600	550	600	6392	34392
600×500	24×20	--	--	1972	--	--	900	700	620	650	8737	40918

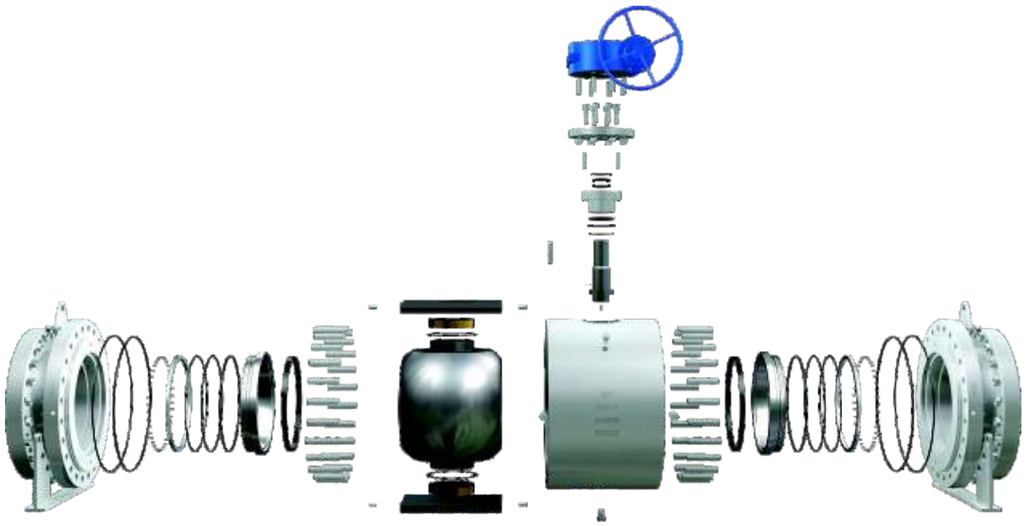

技术规范 Technical Specifications

设计依据 Design Basis		GB		API		ASME
设计标准 Design Standard		GB/T 12237	GB/T 19672	API 608	API 6D	ASME B16.34
结构长度 Face-to-Face		GB/T 12221	GB/T 19672	ASME B16.10	API 6D	ASME B16.10
连接端* Connection End	法兰连接 Flanged	GB/T 9113		ASME B16.5/MSS SP-44/ASME B16.47[a]		
	对焊连接 Butt-Welding	GB/T 12224		ASME B16.25		
材料要求 Material		NACE MR0175				
试验和检验 Test and Inspection		JB/T 9092	GB/T 19672	API 598	API 6D	ASME B16.34
耐火试验 Fire Test		JB/T 6899		API 6FA/API607		

* 阀门连接端对焊端尺寸可按用户要求设计制造。
The dimension of welded end connection can be designed and manufactured according to the buyers's request.

a.MSS SP-44 for size 22.
ASME B16.47 Series A for size 26 & over.

主要零件与材质 Main Parts and Materials

常规型 Conventional Type

零件名称 Part Name	碳钢 Carbon Steel		低温钢, Low Temp. Steel		不锈钢 Stainless Steel	
	GB	ASTM	GB	ASTM	GB	ASTM
阀体 Body	25	A105	0Cr18Ni9	A350-LF2	0Cr18Ni9 00Cr17Ni12Mo2	A182-F304 A182-F316
螺栓/螺母 Bolt/Nut	35CrMo 45	A193-B7 A194-2H	304 304	A320-L7 A194-4	304 304	A193-B8 A194-8
球体 Ball	25+ENP	A105+ENP	0Cr18Ni9	A350-LF2+ENP	0Cr18Ni9 00Cr17Ni12Mo2	A182-F304 A182-F316
阀杆 Stem	1Cr13 2Cr13	A276-410 A276-420	304	A350-LF2 A276-304	304 316	A276-304 A276-316
阀座 Seat	25+ENP	A105+ENP	304	A350 LF2+ENP	0Cr18Ni9 00Cr17Ni12Mo2	A182-F304 A182-F316
阀座密封圈 Seat insert	Standard: PTFE/NYLON Special: PEEK/DEVLON/VITON		Standard: PTFE/NYLON Special: PEEK/DEVLON/VITON		Standard: PTFE/NYLON Special: PEEK/DEVLON/VITON	
O型圈 O-Ring	NBR OR VITON		NBR OR VITON		VITON	
垫片 Gasket	柔性石墨+不锈钢 Graphite+ Stainless steel		柔性石墨+不锈钢 Graphite+ Stainless steel		柔性石墨+不锈钢 Graphite+ Stainless steel	

主要零件与材质 Main Parts and Materials

抗硫型：Sulfur-resisting type

零件名称 Part Name	碳钢 Carbon Steel		低温钢, Low Temp. Steel		不锈钢 Stainless Steel	
	GB	ASTM	GB	ASTM	GB	ASTM
阀体 Body	25	A105	0Cr18Ni9	A350-LF2	0Cr18Ni9 00Cr17Ni12Mo2	A182-F304 A182-F316
螺栓/螺母 Bolt/Nut	35CrMo 45	A193-B7 A194-2H	304 304	A320-L7 A194-4	304 304	A193-B8 A194-8
球体 Ball	25+ENP	A105+ENP	0Cr18Ni9	A350-LF2+ENP	0Cr18Ni9 00Cr17Ni12Mo2	A182-F304 A182-F316
阀杆 Stem	17-4PH		For use at low temperatures resilient steels.		304 316	A276-304 A276-316
阀座 Seat	25+ENP	A105+ENP	304	A350 LF2+ENP	0Cr18Ni9 00Cr17Ni12Mo2	A182-F304 A182-F316
阀座密封圈 Seat insert	Standard: PTFE/NYLON Special: PEEK/DEVLON/VITON		Standard: PTFE/NYLON Special: PEEK/DEVLON/VITON		Standard: PTFE/NYLON Special: PEEK/DEVLON/VITON	
O型圈 O-Ring	NBR OR VITON		NBR OR VITON		VITON	
垫片 Gasket	柔性石墨+不锈钢 Graphite+ Stainless steel		柔性石墨+不锈钢 Graphite+ Stainless steel		柔性石墨+不锈钢 Graphite+ Stainless steel	

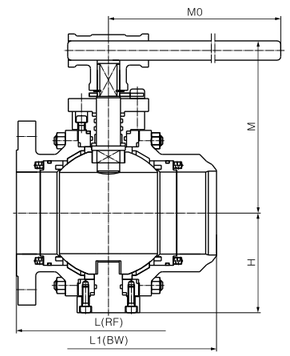

手动操作，MA
Lever-Operated

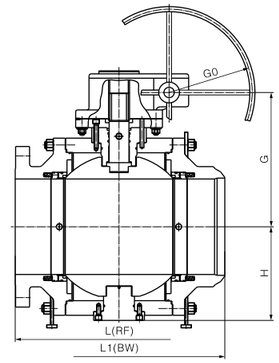

蜗轮传动操作，GA
Worm Gear Operated

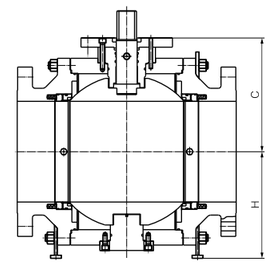

光杆带配盘，BSMP
Bare Stem with Mounting Pad

主要外形尺寸 Main External Dimensions

Class 150

全通径 Full Bore　　单位Unit：mm

DN	NPS	L (RF)	L1 (BW)	手柄 MA		蜗轮传动 GA		C	H	WT(Kg)	Torque (N·M)
				M	M0	G	G0				
50	2	178	216	130	250	--	--	105	100	28	57
65	$2^1/_2$	191	241	142	300	--	--	130	110	39	71
80	3	203	283	191	350	185	280	155	125	49	95
100	4	229	305	200	500	235	280	200	160	88	192
150	6	394	457	226	800	325	300	250	185	160	485
200	8	457	521	242	1000	390	400	278	222	248	832
250	10	533	559	--	--	445	400	323	280	379	1105
300	12	610	635	--	--	520	500	340	303	571	1655
350	14	686	762	--	--	550	500	375	330	759	2695
400	16	762	838	--	--	580	600	410	355	1150	3164
450	18	864	914	--	--	605	600	440	390	1192	3793
500	20	914	991	--	--	610	600	495	430	1769	5500
550	22	991	1092	--	--	670	600	525	475	2367	6650
600	24	1067	1143	--	--	725	700	585	520	3450	7529
650	26	1143	1245	--	--	760	700	630	560	4050	8693
700	28	1245	1346	--	--	790	700	645	650	4830	10770
750	30	1295	1397	--	--	825	700	690	700	5960	12365
800	32	1372	1524	--	--	870	700	740	745	7480	14070
850	34	1473	1626	--	--	910	700	760	775	8032	21148
900	36	1524	1727	--	--	950	700	810	805	9100	22987
1000	40	1753	1956	--	--	1005	700	895	900	14100	26059
1050	42	1790	2083	--	--	1045	800	950	935	15320	28149
1200	48	1995	2388	--	--	1235	800	1095	1070	22000	42776
1400	56	2489	2489	--	--	1450	800	1300	1250	34150	65654
1500	60	2640	2640	--	--	1550	1000	1380	1350	42500	85654
1600	64	--	--	--	--	--	--	--	--	--	--

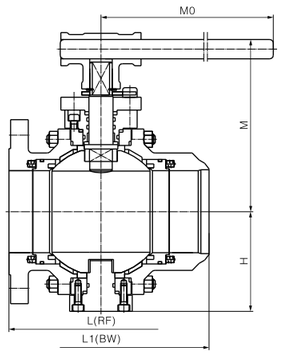

手动操作，MA
Lever-Operated

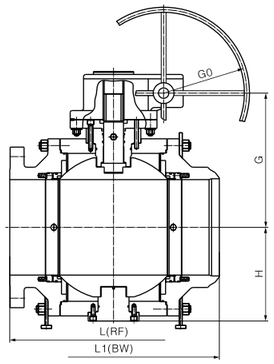

蜗轮传动操作，GA
Worm Gear Operated

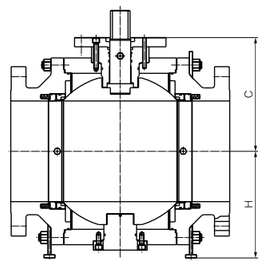

光杆带配盘，BSMP
Bare Stem with Mounting Pad

主要外形尺寸 Main External Dimensions

PN16/PN20/Class150

缩径 Reduced Bore　　单位Unit：mm

DN × DN'	NPS × NPS'	L (RF)	L1 (BW)	手柄 MA		蜗轮传动 GA		C	H	WT(Kg)	Torque (N·M)
				M	M0	G	G0				
50×40	2×1 1/2	178	216	100	200	--	--	95	100	26	28
80×50	3×2	203	283	130	250	--	--	105	100	32	57
100×80	4×3	229	305	191	350	185	280	155	125	63	95
150×100	6×4	394	457	200	500	235	280	200	160	118	192
200×150	8×6	457	521	226	800	325	300	250	185	190	485
250×200	10×8	533	559	242	1000	390	400	278	222	290	832
300×250	12×10	610	635	--	--	445	400	323	280	465	1105
350×250	14×10	686	762	--	--	445	400	323	280	532	1105
350×300	14×12	686	762	--	--	520	500	340	303	622	1655
400×300	16×12	762	838	--	--	520	500	340	303	730	1655
400×350	16×14	762	838	--	--	550	500	375	330	830	2695
450×350	18×14	864	914	--	--	550	500	375	330	995	2695
450×400	18×16	864	914	--	--	580	600	410	355	1030	3164
500×400	20×16	914	991	--	--	580	600	410	355	1315	3164
500×450	20×18	914	991	--	--	605	600	440	390	1420	3793
600×500	24×20	1067	1143	--	--	610	600	495	430	2048	5500
750×600	30×24	1295	1397	--	--	725	700	585	520	3830	7529
900×750	36×30	1524	1727	--	--	825	700	690	700	7100	12365

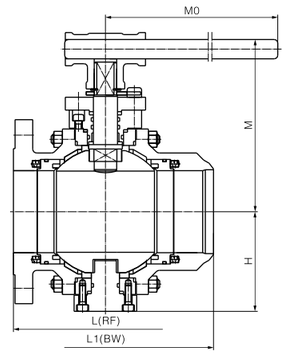

手动操作，MA
Lever-Operated

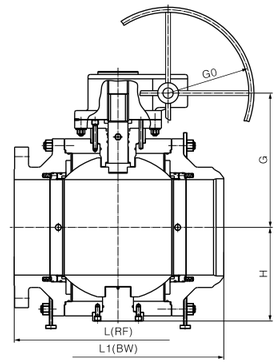

蜗轮传动操作，GA
Worm Gear Operated

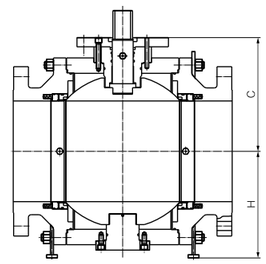

光杆带配盘，BSMP
Bare Stem with Mounting Pad

主要外形尺寸 Main External Dimensions

PN25/PN40/PN50/Class300

全通径 Full Bore　　单位Unit：mm

DN	NPS	L (RF)	L1 (BW)	手柄 MA		蜗轮传动 GA		C	H	WT(Kg)	Torque (N·M)
				M	M0	G	G0				
50	2	216	216	130	250	--	--	105	100	29	99
65	2 1/2	241	241	142	350	--	--	130	110	40	124
80	3	283	283	191	400	185	280	155	125	57	212
100	4	305	305	200	500	235	280	200	160	97	335
150	6	457	457	226	800	325	300	250	203	185	544
200	8	502	521	242	1000	390	400	278	232	287	1250
250	10	568	559	--	--	445	400	333	298	507	1736
300	12	648	635	--	--	520	500	360	333	740	2388
350	14	762	762	--	--	550	500	395	350	1038	3224
400	16	838	838	--	--	580	600	433	398	1452	5139
450	18	914	914	--	--	605	600	460	410	1648	7970
500	20	991	991	--	--	610	600	505	470	2207	10570
550	22	1092	1092	--	--	670	600	530	485	2797	12140
600	24	1143	1143	--	--	725	700	590	550	3940	17240
650	26	1245	1245	--	--	760	700	635	585	4670	20340
700	28	1346	1346	--	--	790	700	645	670	5780	25069
750	30	1397	1397	--	--	825	700	700	730	6600	27640
800	32	1524	1524	--	--	870	700	750	770	7940	29550
850	34	1626	1626	--	--	910	700	760	800	9100	31558
900	36	1727	1727	--	--	950	700	810	825	10150	35170
1000	40	1956	1956	--	--	1005	700	905	920	13800	39115
1050	42	2083	2083	--	--	1045	800	960	955	16120	42414
1200	48	2170	2170	--	--	1235	800	1100	1105	24070	71868
1400	56	2743	2743	--	--	1450	1000	1300	1275	38200	108550

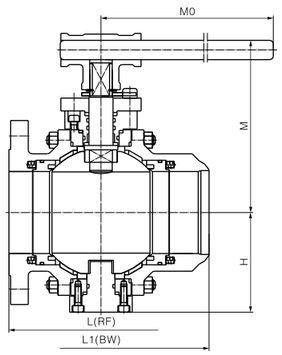

手动操作，MA
Lever–Operated

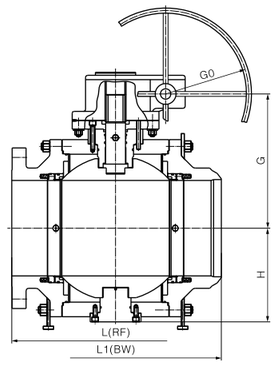

蜗轮传动操作，GA
Worm Gear Operated

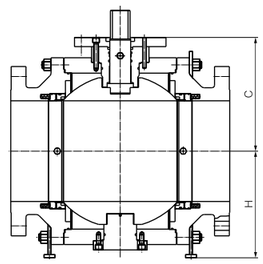

光杆带配盘，BSMP
Bare Stem with Mounting Pad

主要外形尺寸 Main External Dimensions

PN25/PN40/PN50/Class300

缩径 Reduced Bore　　单位Unit：mm

DN×DN'	NPS×NPS'	L (RF)	L1 (BW)	手柄 MA		蜗轮传动 GA		C	H	WT(Kg)	Torque (N·M)
				M	M0	G	G0				
50×40	2×1 1/2	216	216	100	250	--	--	95	100	27	50
80×50	3×2	283	283	130	250	--	--	105	100	34	99
100×80	4×3	305	305	191	400	185	280	155	125	65	212
150×100	6×4	457	457	200	500	235	280	200	160	118	335
200×150	8×6	502	521	226	800	325	300	250	203	222	544
250×200	10×8	568	559	242	1000	390	400	278	232	297	1250
300×250	12×10	648	635	--	--	445	400	333	298	507	1736
350×250	14×10	762	762	--	--	445	400	333	298	648	1736
350×300	14×12	762	762	--	--	520	500	360	333	820	2388
400×300	16×12	838	838	--	--	520	500	360	333	970	2388
400×350	16×14	838	838	--	--	550	500	395	350	1130	3224
450×350	18×14	914	914	--	--	550	500	395	350	1420	3224
450×400	18×16	914	914	--	--	580	600	433	398	1598	5139
500×400	20×16	991	991	--	--	580	600	433	398	1668	5139
500×450	20×18	991	991	--	--	605	600	460	410	1797	7970
600×500	24×20	1143	1143	--	--	610	600	505	470	2667	10570
750×600	30×24	1397	1397	--	--	725	700	590	550	4490	17240
900×750	36×30	1727	1727	--	--	825	700	700	730	8190	27640

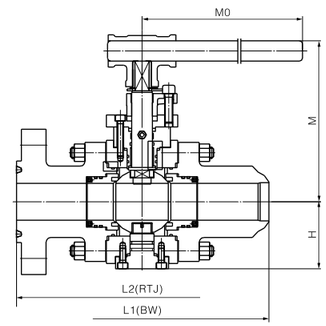

手动操作，MA
Lever–Operated

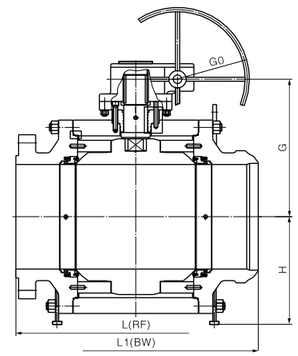

蜗轮传动操作，GA
Worm Gear Operated

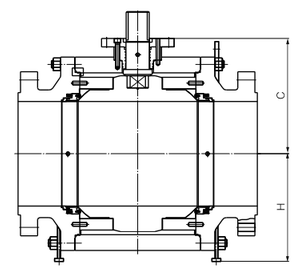

光杆带配盘，BSMP
Bare Stem with Mounting Pad

主要外形尺寸 Main External Dimensions

PN63/PN64/Class400

全通径 Full Bore　　单位Unit：mm

DN	NPS	L (RF)	L1 (BW)	L2 (RTJ)	手柄 MA		蜗轮传动 GA		C	H	WT(Kg)	Torque (N·M)
					M	M0	G	G0				
50	2	292	292	295	136	500	--	--	105	100	25	124
65	2 1/2	330	330	333	164	650	--	--	135	115	35	155
80	3	356	356	359	191	650	220	300	165	130	56	265
100	4	406	406	410	244	800	254	400	210	162	90	467
150	6	495	495	498	--	--	350	400	243	203	249	650
200	8	597	597	600	--	--	385	400	285	257	458	1806
250	10	673	673	676	--	--	440	500	323	310	676	2638
300	12	762	762	765	--	--	490	500	370	350	939	2929
350	14	826	826	829	--	--	510	500	385	360	1166	3971
400	16	902	902	905	--	--	545	500	428	413	1397	6307
450	18	978	978	981	--	--	630	600	465	430	1960	9165
500	20	1054	1054	1060	--	--	670	600	500	490	2649	12155
550	22	1143	1143	1153	--	--	720	600	540	510	3286	15175
600	24	1232	1232	1241	--	--	772	600	590	570	3936	21550
650	26	1308	1308	1321	--	--	805	700	630	620	4990	25426
700	28	1397	1397	1410	--	--	832	700	660	690	5718	31336
750	30	1524	1524	1537	--	--	860	800	705	750	6850	34550
800	32	1651	1651	1667	--	--	910	800	748	780	7766	36937
850	34	1778	1778	1794	--	--	946	800	775	815	9507	39447
900	36	1880	1880	1895	--	--	980	800	810	840	11077	43962
1000	40	2250	2250	--	--	--	1205	800	910	940	14138	48894
1050	42	--	--	--	--	--	1285	800	965	980	16679	50300
1200	48	--	--	--	--	--	1435	1000	1100	1120	23179	80302

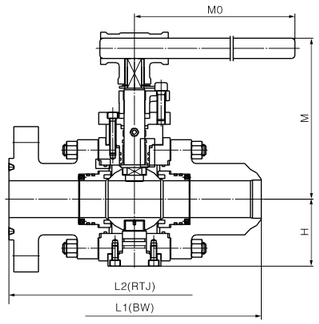

手动操作，MA
Lever-Operated

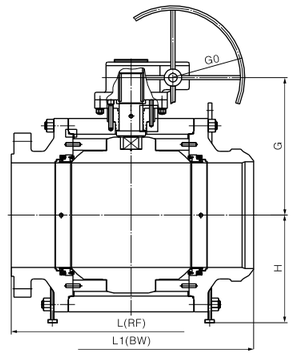

蜗轮传动操作，GA
Worm Gear Operated

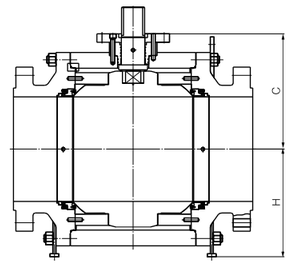

光杆带配盘，BSMP
Bare Stem with Mounting Pad

主要外形尺寸 Main External Dimensions

PN63/PN64/Class400

缩径 Reduced Bore　　单位Unit：mm

DN×DN'	NPS×NPS'	L (RF)	L1 (BW)	L2 (RTJ)	手柄 MA		蜗轮传动 GA		C	H	WT(Kg)	Torque (N·M)
					M	M0	G	G0				
50×40	2×1 1/2	292	292	295	130	400	--	--	100	100	22	98
80×50	3×2	356	356	359	136	500	--	--	105	100	36	124
100×80	4×3	406	406	410	191	650	220	300	165	130	47	265
150×100	6×4	495	495	498	244	800	254	400	210	162	127	467
200×150	8×6	597	597	600	--	--	350	400	243	203	280	650
250×200	10×8	673	673	676	--	--	385	400	285	257	508	1806
300×250	12×10	762	762	765	--	--	440	500	323	310	746	2638
350×250	14×10	826	826	829	--	--	440	500	323	310	845	2638
350×300	14×12	826	826	829	--	--	490	500	370	350	1060	2929
400×300	16×12	902	902	905	--	--	490	500	370	350	1230	2929
400×350	16×14	902	902	905	--	--	510	500	385	360	1330	3971
450×350	18×14	978	978	981	--	--	510	500	385	360	1480	3971
450×400	18×16	978	978	981	--	--	545	500	428	413	1592	6307
500×400	20×16	1054	1054	1060	--	--	545	500	428	413	1887	6307
500×450	20×18	1054	1054	1060	--	--	630	600	465	430	2197	9165
600×500	24×20	1232	1232	1241	--	--	670	600	500	490	3160	12155
750×600	30×24	1524	1524	1537	--	--	772	600	590	570	5580	21550
900×750	36×30	1880	1880	1895	--	--	860	800	705	750	9520	34550

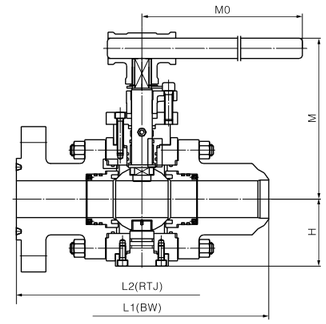

手动操作，MA
Lever-Operated

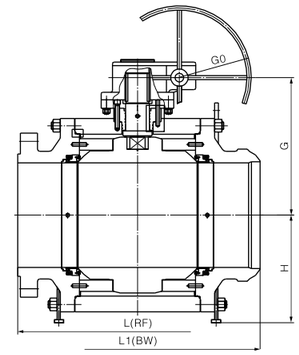

蜗轮传动操作，GA
Worm Gear Operated

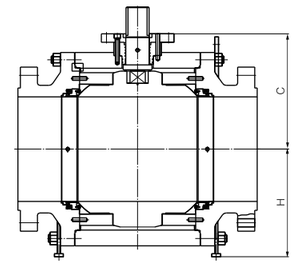

光杆带配盘，BSMP
Bare Stem with Mounting Pad

主要外形尺寸 Main External Dimensions

PN100/PN110/Class600

全通径 Full Bore　　单位Unit：mm

DN	NPS	L (RF)	L1 (BW)	L2 (RTJ)	手柄 MA		蜗轮传动 GA		C	H	WT(Kg)	Torque (N·M)
					M	M0	G	G0				
50	2	292	292	295	136	500	--	--	105	100	33	168
65	2 1/2	330	330	333	164	650	--	--	135	115	43	210
80	3	356	356	359	191	650	220	300	165	130	64	360
100	4	432	432	435	244	800	254	400	210	162	124	572
150	6	559	559	562	--	--	360	400	253	203	255	912
200	8	660	660	664	--	--	390	400	290	257	487	2177
250	10	787	787	791	--	--	450	500	333	310	760	3093
300	12	838	838	841	--	--	500	500	380	350	984	4282
350	14	889	889	892	--	--	520	500	395	360	1266	7458
400	16	991	991	994	--	--	550	500	433	413	1532	9310
450	18	1092	1092	1095	--	--	635	600	470	430	2097	14693
500	20	1194	1194	1200	--	--	675	600	505	490	2640	20011
550	22	1295	1295	1305	--	--	728	600	545	510	3790	24785
600	24	1397	1397	1407	--	--	780	600	595	570	4740	31226
650	26	1448	1448	1461	--	--	810	700	635	620	5650	35184
700	28	1549	1549	1562	--	--	840	700	665	690	6760	38987
750	30	1651	1651	1664	--	--	870	800	710	750	8380	41832
800	32	1778	1778	1794	--	--	915	800	755	780	9740	63865
850	34	1930	1930	1946	--	--	951	800	780	815	11340	71720
900	36	2083	2083	2099	--	--	987	1000	815	840	13300	89020
1000	40	2337	2337	2366	--	--	1212	1000	915	940	18340	109900
1050	42	2439	2439	2467	--	--	1292	1000	970	980	21550	121165
1200	48	2540	2540	2540	--	--	1440	1000	1105	1120	31500	145345
1400	56	2949	2949	2949	--	--	1600	1000	1300	1290	48050	169230

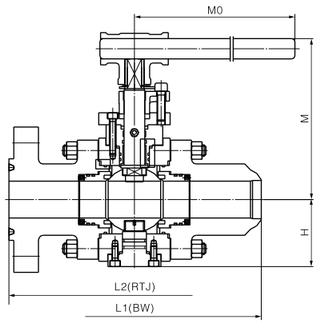

手动操作，MA
Lever-Operated

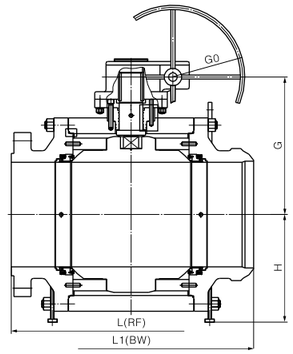

蜗轮传动操作，GA
Worm Gear Operated

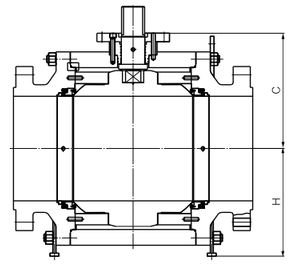

光杆带配盘，BSMP
Bare Stem with Mounting Pad

主要外形尺寸 Main External Dimensions

PN100/PN110/Class600

缩径 Reduced Bore　　单位Unit：mm

DN×DN'	NPS×NPS'	L (RF)	L1 (BW)	L2 (RTJ)	手柄 MA		蜗轮传动 GA		C	H	WT(Kg)	Torque (N·M)
					M	M0	G	G0				
50×40	2×1 1/2	292	292	295	110	350	--	--	95	100	30	130
80×50	3×2	356	356	359	136	500	--	--	105	100	40	168
100×80	4×3	432	432	435	191	650	220	300	165	130	80	360
150×100	6×4	559	559	562	244	800	254	400	210	162	153	572
200×150	8×6	660	660	664	--	--	360	400	253	203	290	912
250×200	10×8	787	787	791	--	--	390	400	290	257	547	2177
300×250	12×10	838	838	841	--	--	450	500	333	310	810	3093
350×250	14×10	889	889	892	--	--	450	500	333	310	915	3093
350×300	14×12	889	889	892	--	--	500	500	380	350	1140	4282
400×300	16×12	991	991	994	--	--	500	500	380	350	1350	4282
400×350	16×14	991	991	994	--	--	520	500	395	360	1450	7458
450×350	18×14	1092	1092	1095	--	--	520	500	395	360	1530	7458
450×400	18×16	1092	1092	1095	--	--	550	500	433	413	1682	9310
500×400	20×16	1194	1194	1200	--	--	550	500	433	413	2087	9310
500×450	20×18	1194	1194	1200	--	--	635	600	470	430	2377	14693
600×500	24×20	1397	1397	1407	--	--	675	600	505	490	3250	20011
750×600	30×24	1651	1651	1664	--	--	780	600	595	570	6200	31226
900×750	36×30	2083	2083	2099	--	--	870	800	710	750	10500	41832

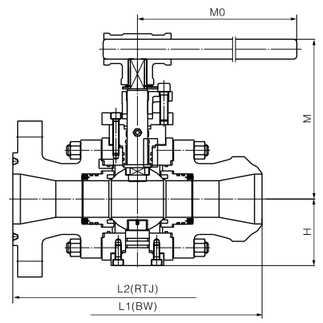

手动操作，MA
Lever-Operated

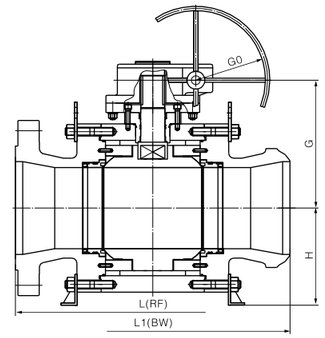

蜗轮传动操作，GA
Worm Gear Operated

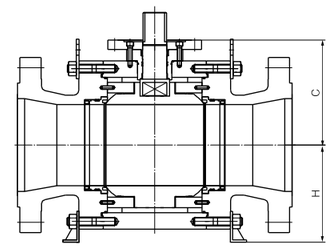

光杆带配盘，BSMP
Bare Stem with Mounting Pad

主要外形尺寸 Main External Dimensions

PN150/PN160/Class900

全通径 Full Bore　　单位Unit：mm

DN	NPS	L (RF)	L1 (BW)	L2 (RTJ)	手柄 MA		蜗轮传动 GA		C	H	WT(Kg)	Torque (N·M)
					M	M0	G	G0				
50	2	368	368	371	148	650	--	--	105	110	50	228
65	2 1/2	419	419	422	191	650	--	--	135	118	61	263
80	3	381	381	384	216	800	255	400	165	130	76	512
100	4	457	457	460	--	--	285	400	210	167	150	946
150	6	610	610	613	--	--	370	400	260	251	367	1784
200	8	737	737	740	--	--	400	500	295	280	600	4116
250	10	838	838	841	--	--	450	500	345	340	1027	5910
300	12	965	965	968	--	--	500	500	384	390	1558	10137
350	14	1029	1029	1038	--	--	520	500	400	442	1765	14141
400	16	1130	1130	1140	--	--	550	600	440	490	2157	18866
450	18	1219	1219	1232	--	--	600	600	482	500	2860	22400
500	20	1321	1321	1334	--	--	630	600	530	500	4220	28544
550	22	--	--	--	--	--	--	--	--	--	--	--
600	24	1549	1549	1568	--	--	810	700	615	630	7150	43276
650	26	1651	1651	1673	--	--	850	700	650	650	8040	48580
700	28	1753	1753	1775	--	--	900	800	670	710	10840	60000
750	30	1880	1880	1902	--	--	980	1000	725	780	12210	76000
800	32	2032	2032	2054	--	--	1240	1000	785	810	14992	90195
850	34	2159	2159	2188	--	--	1275	1000	805	850	17230	100460
900	36	2286	2286	2315	--	--	1310	1000	845	900	19920	131875
1000	40	2283	2100	2311	--	--	1420	1000	955	980	24251	--
1050	42	2438	2200	2461	--	--	1455	1000	986	990	28660	--
1200	48	2769	2300	2797	--	--	1530	1000	1150	1199	36156	--

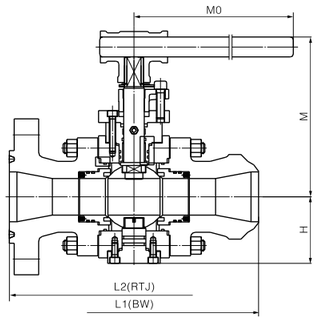

手动操作，MA
Lever-Operated

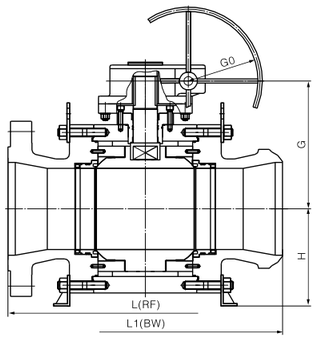

蜗轮传动操作，GA
Worm Gear Operated

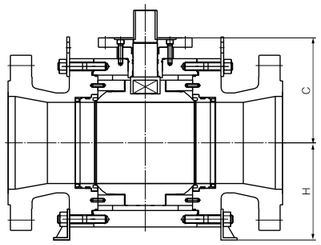

光杆带配盘，BSMP
Bare Stem with Mounting Pad

主要外形尺寸 Main External Dimensions

PN150/PN160/Class900

缩径 Reduced Bore　　单位Unit：mm

DN×DN'	NPS×NPS'	L (RF)	L1 (BW)	L2 (RTJ)	手柄 MA		蜗轮传动 GA		C	H	WT(Kg)	Torque (N·M)
					M	M0	G	G0				
50×40	2×1 1/2	368	368	371	128	500	--	--	105	110	49	163
80×50	3×2	381	381	384	148	650	--	--	105	110	59	228
100×80	4×3	457	457	460	216	800	255	400	165	130	97	512
150×100	6×4	610	610	613	--	--	285	400	210	167	249	946
200×150	8×6	737	737	740	--	--	370	400	260	251	447	1784
250×200	10×8	838	838	841	--	--	400	500	295	280	700	4116
300×250	12×10	965	965	968	--	--	450	500	345	340	1148	5910
350×250	14×10	1029	1029	1038	--	--	450	500	345	340	1235	5910
350×300	14×12	1029	1029	1038	--	--	500	500	384	390	1643	10137
400×300	16×12	1130	1130	1140	--	--	500	500	384	390	1738	10137
400×350	16×14	1130	1130	1140	--	--	520	500	400	442	1829	14141
450×350	18×14	1219	1219	1232	--	--	520	500	400	442	1920	14141
450×400	18×16	1219	1219	1232	--	--	550	600	440	490	2437	18866
500×400	20×16	1321	1321	1334	--	--	550	600	440	490	2887	18866
500×450	20×18	1321	1321	1334	--	--	600	600	482	500	3260	22400
600×500	24×20	1549	1549	1568	--	--	630	600	530	500	5400	28544
750×600	30×24	1880	1880	1902	--	--	810	700	615	630	8750	43276
900×750	36×30	2286	2286	2315	--	--	980	1000	725	780	15420	76000

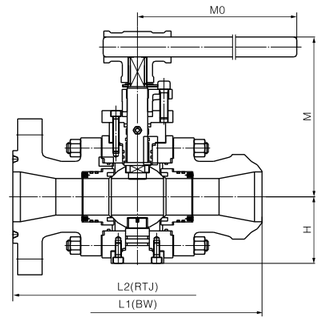

手动操作，MA
Lever-Operated

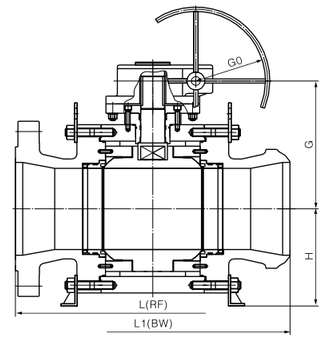

蜗轮传动操作，GA
Worm Gear Operated

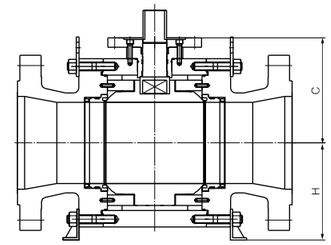

光杆带配盘，BSMP
Bare Stem with Mounting Pad

主要外形尺寸 Main External Dimensions

PN250/PN260/Class1500

全通径 Full Bore　　单位Unit：mm

DN	NPS	L (RF)	L1 (BW)	L2 (RTJ)	手柄 MA		蜗轮传动 GA		C	H	WT(Kg)	Torque (N·M)
					M	M0	G	G0				
50	2	368	368	371	175	650	--	--	105	105	53	390
65	2 1/2	419	419	422	191	650	--	--	138	120	63	448
80	3	470	470	473	216	750	255	500	165	130	98	931
100	4	546	546	549	--	--	285	500	215	167	200	1524
150	6	705	705	711	--	--	460	500	260	270	485	2934
200	8	832	832	841	--	--	520	500	300	300	827	7215
250	10	991	991	1000	--	--	640	500	365	360	1507	10990
300	12	1130	1130	1146	--	--	720	500	420	423	2272	16103
350	14	1257	1257	1276	--	--	760	500	440	460	2880	24518
400	16	1384	1384	1407	--	--	820	600	480	510	4120	29630
450	18	1537	1537	1559	--	--	880	600	550	600	6260	34392
500	20	1664	1664	1686	--	--	900	700	620	650	9120	40918
550	22	--	--	--	--	--	--	--	--	--	--	--
600	24	--	--	1972	--	--	920	800	700	720	14320	65351

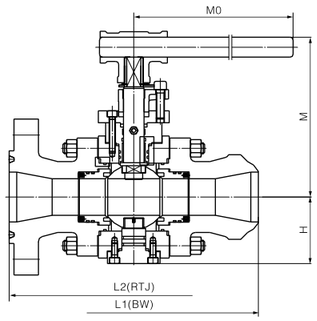

手动操作，MA
Lever-Operated

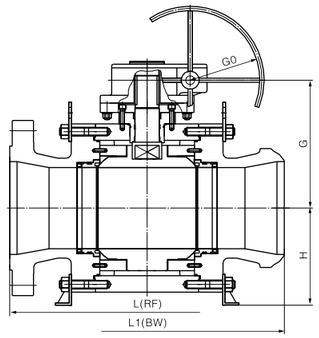

蜗轮传动操作，GA
Worm Gear Operated

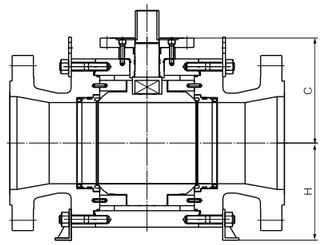

光杆带配盘，BSMP
Bare Stem with Mounting Pad

主要外形尺寸 Main External Dimensions

PN250/PN260/Class1500

缩径 Reduced Bore　　单位Unit：mm

DN×DN'	NPS×NPS'	L (RF)	L1 (BW)	L2 (RTJ)	手柄 MA		蜗轮传动 GA		C	H	WT(Kg)	Torque (N·M)
					M	M0	G	G0				
50×40	2×1 1/2	368	368	371	160	600	--	--	105	105	45	181
80×50	3×2	470	470	473	175	650	--	--	105	105	66	390
100×80	4×3	546	546	549	216	750	255	500	165	130	126	931
150×100	6×4	705	705	711	--	--	285	500	215	167	290	1524
200×150	8×6	832	832	841	--	--	460	500	260	270	575	2934
250×200	10×8	991	991	1000	--	--	520	500	300	300	1032	7215
300×250	12×10	1130	1130	1146	--	--	640	500	365	360	1767	10990
350×250	14×10	1257	1257	1276	--	--	640	500	365	360	2152	10990
350×300	14×12	1257	1257	1276	--	--	720	500	420	423	2537	16103
400×300	16×12	1384	1384	1407	--	--	720	500	420	423	2807	16103
400×350	16×14	1384	1384	1407	--	--	760	500	440	460	3280	24518
450×350	18×14	1537	1537	1559	--	--	760	500	440	460	4050	24518
450×400	18×16	1537	1537	1559	--	--	820	600	480	510	4980	29630
500×400	20×16	1664	1664	1686	--	--	820	600	480	510	5350	29630
500×450	20×18	1664	1664	1686	--	--	880	600	550	600	7540	34392
600×500	24×20	--	--	1972	--	--	900	700	620	650	11050	40918

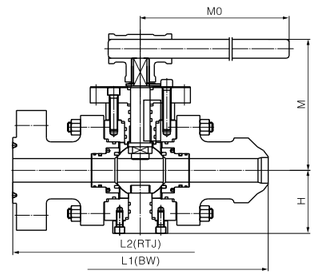

手动操作，MA
Lever-Operated

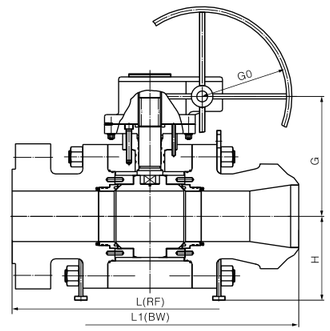

蜗轮传动操作，GA
Worm Gear Operated

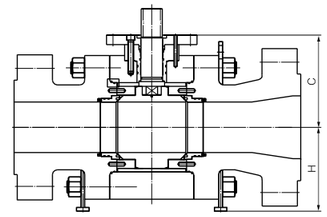

光杆带配盘，BSMP
Bare Stem with Mounting Pad

主要外形尺寸 Main External Dimensions

PN420/Class2500

全通径 Full Bore　　单位Unit：mm

DN	NPS	L (RF)	L1 (BW)	L2 (RTJ)	手柄 MA		蜗轮传动 GA		C	H	WT(Kg)	Torque (N·M)
					M	M0	G	G0				
50	2	451	451	454	168	800	170	350	120	125	90	589
65	2 1/2	508	508	514	190	1000	210	450	140	160	152	736
80	3	578	578	584	205	1000	250	500	175	200	200	1577
100	4	673	673	683	--	--	290	500	225	230	385	1965
150	6	914	914	927	--	--	340	600	260	250	778	5501
200	8	1022	1022	1038	--	--	470	600	380	340	1352	11786
250	10	1270	1270	1292	--	--	490	700	450	425	2537	13222
300	12	1422	1422	1445	--	--	615	800	515	480	3667	20075

缩径 Reduced Bore　　单位Unit：mm

DN×DN'	NPS×NPS'	L (RF)	L1 (BW)	L2 (RTJ)	手柄 MA		蜗轮传动 GA		C	H	WT(Kg)	Torque (N·M)
					M	M0	G	G0				
50×40	2×1 1/2	451	451	454	155	800	--	--	115	105	63	320
80×50	3×2	578	578	584	168	800	170	350	120	125	158	589
100×80	4×3	673	673	683	205	1000	250	500	175	200	270	1577
150×100	6×4	914	914	927	--	--	290	500	225	230	517	1965
200×150	8×6	1022	1022	1038	--	--	340	600	260	250	1098	5501
250×200	10×8	1270	1270	1292	--	--	470	600	380	340	1667	11786
300×250	12×10	1422	1422	1445	--	--	490	700	450	425	2867	13222

技术规范 Technical Specifications

设计依据 Design Basis		API		ASME	
设计标准 Design Standard		API 6D		ASME B16.34	ASME Ⅷ
结构长度 Face-to-Face		ASME B16.10[a]	API 6D[a]	ASME B16.10[a]	
连接端* Connection End	法兰连接 Flanged	ASME B16.5			
	对焊连接 Butt-Welding	ASME B16.25			
材料要求 Material		NACE MR0175			
试验和检验 Test and Inspection		API 598	API 6D	ASME B16.34	
耐火试验 Fire Test		API 6FA/API 607			

a. 产品结构长度以制造厂商标准为主，部分产品结构长度引用此类标准；
如需本产品具体规格尺寸，请与制造厂商联系。
a. The dimension is determined by the manufacturer and some products are conformed to this standard:
If you want detailed dimensions of our products, please contact with the manufacturer.

产品设计特点 Designing Features

- 全通径设计
- 一体式阀体结构
- 防爆出阀杆设计
- 密封零泄漏
- 锻钢阀体设计
- 双阻断双排放（DBB）
- 阀座单活塞设计（SPE）
- 可选阀座双活塞设计（DPE）
- 耐火设计
- 防静电设计
- 可选低温应用
- 可选全焊接设计
- 可选软密封或硬密封阀座设计
- 在线免维护设计

- Full bore design
- One piece body construction
- Blow out protection stem design
- Zero-leakage
- Forged steel body design
- Double-block and bleed function
- Single piston design
- Seat is available with double piston design
- Fire-proof design
- Anti-static design
- Optional cryogenic application
- Optional fully welding design
- Optional soft or hard sealing design
- Maintenance-free design

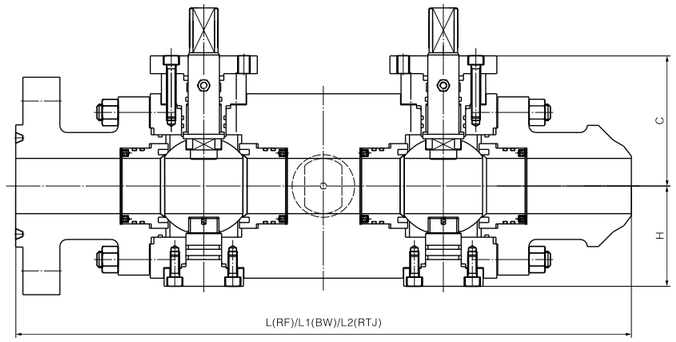

光杆带配盘
Bare Stem with Mounting Pad

主要外形尺寸 Main External Dimensions Class 150

DN	NPS	L (RF)	L1 (BW)	L2 (RTJ)	C	H	KG
50	2	312	378	334	105	98	37
80	3	355	495	378	130	127	75
100	4	401	534	422	150	165	150
150	6	690	800	711	237	235	207
200	8	800	912	823	288	239	300
250	10	933	978	956	326	277	480
300	12	1068	1111	1089	364	316	690
350	14	1201	1334	1223	395	341	923
400	16	1334	1467	1356	437	383	1312
450	18	1512	1600	1533	471	417	1582
500	20	1600	1734	1622	508	454	2033
600	24	1867	2000	1890	590	529	3164
650	26	2000	2179	--	675	623	3500
700	28	2179	2356	--	718	666	4046
750	30	2266	2445	--	756	699	4795
800	32	2401	2667	--	752	713	5403
850	34	2578	2846	--	824	732	6600
900	36	2667	3022	--	881	785	7626
1000	40	2975	3325	--	998	900	10063
1050	42	3150	3500	--	1058	976	11563
1200	48	3588	3894	--	1106	1035	14027

主要外形尺寸 Main External Dimensions Class 300

DN	NPS	L (RF)	L1 (BW)	L2 (RTJ)	C	H	KG
50	2	378	378	406	120	102	42
80	3	495	495	522	164	148	80
100	4	534	534	562	165	165	170
150	6	705	800	733	237	206	265
200	8	879	912	907	288	239	350
250	10	994	978	1022	326	277	530
300	12	1134	1111	1162	364	316	764
350	14	1334	1334	1362	395	341	1055
400	16	1467	1467	1495	437	383	1476
450	18	1600	1600	1628	486	432	2041
500	20	1734	1734	1768	532	478	2693
600	24	2000	2000	2039	640	578	3164
650	26	2179	2179	2223	675	612	3512
700	28	2356	2356	2401	700	648	4108
750	30	2445	2445	2489	735	670	5007
800	32	2667	2667	2718	775	713	5700
850	34	2846	2846	2895	844	759	6712
900	36	3022	3022	3073	899	811	7711
1000	40	3115	3535	--	1006	920	10068
1050	42	3290	3658	--	1064	1013	12213
1200	48	3806	4086	--	1139	1088	15067

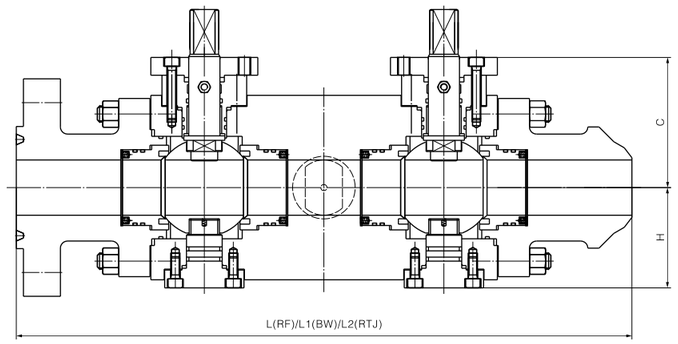

光杆带配盘
Bare Stem with Mounting Pad

主要外形尺寸 Main External Dimensions Class 600

DN	NPS	L (RF)	L1 (BW)	L2 (RTJ)	C	H	KG
50	2	511	511	516	129	105	45
80	3	623	623	628	164	147	80
100	4	756	756	761	184	165	210
150	6	978	978	984	237	212	315
200	8	1155	1155	1162	304	254	500
250	10	1377	1377	1384	359	303	900
300	12	1467	1467	1472	378	330	1067
350	14	1556	1556	1561	414	360	1352
400	16	1734	1734	1740	455	401	1993
450	18	1911	1911	1916	503	449	2625
500	20	2090	2090	2100	543	485	3384
600	24	2445	2445	2462	646	584	5577
650	26	2534	2534	2557	670	614	6530
700	28	2711	2711	2734	618	643	7542
750	30	2889	2889	2912	642	682	9139
800	32	3112	3112	3140	673	724	10505
850	34	3378	3378	3406	615	769	12149
900	36	3645	3645	3673	654	806	14137

主要外形尺寸 Main External Dimensions Class 900

DN	NPS	L (RF)	L1 (BW)	L2 (RTJ)	C	H	KG
50	2	644	644	649	129	108	58
80	3	667	667	672	164	147	85
100	4	800	800	805	184	165	258
150	6	1068	1068	1073	237	212	360
200	8	1290	1290	1295	304	254	580
250	10	1467	1467	1472	359	303	990
300	12	1689	1689	1694	398	345	1347
350	14	1801	1801	1817	410	358	1483
400	16	1878	1878	1995	458	407	2071
450	18	2133	2133	2156	502	452	2845
500	20	2312	2312	2335	553	498	3719
600	24	2711	2711	2744	664	597	6471

Class 1500

DN	NPS	L (RF)	L1 (BW)	L2 (RTJ)	C	H	KG
50	2	644	644	649	129	105	58
80	3	823	823	828	164	147	120
100	4	956	956	961	184	165	200
150	6	1234	1234	1244	280	260	495
200	8	1456	1456	1472	332	283	790
250	10	1734	1734	1750	399	349	1350
300	12	1978	1978	2006	431	387	1959
350	14	2200	2200	2233	482	421	2618
400	16	2422	2422	2462	540	474	3634
450	18	2690	2690	2728	628	570	5728
500	20	2912	2912	2951	725	690	8584
600	24	3400	3400	3451	780	733	13639

Class 2500

DN	NPS	L (RF)	L1 (BW)	L2 (RTJ)	C	H	KG
50	2	789	789	795	177	144	165
80	3	1012	1012	1022	203	187	280
100	4	1178	1178	1195	271	250	356
150	6	1600	1600	1622	300	280	800
200	8	1789	1789	1817	485	475	3070
250	10	2223	2223	2261	505	502	3584
300	12	2489	2489	2529	547	514	4500

产品结构特点 Structure Features

用途 Use

主要用于石油和天然气储运，在化工、冶金、造纸、食品、造船等工业领域做控制介质的启闭器，配上气动或电动装置还可以实现远程操作，取保操作人员人身安全。

It's mainly used for oil and natural gas storage and transportation, the chemical industry, metallurgy, paper making, food, shipbuilding and other industries to do the opening and closing control of media devices, coupled with pneumatic or electrical device can also be achieved remotely, bail operator safety.

特点 Feature

1、锁定及限位装置，为了防止阀门误操作，阀门上可配有锁定限位机构，特别是对于安装在野外或工艺不允许开或关的阀门，为防止他人误操作造成安全事故，将阀门锁定是十分必要的；

Locking, and limit device to prevent misuse of the valve, the valve can be equipped with a lock limit institutions, especially in the field or for the installation process does not allow to open or close the valve, causing security to prevent misuse of others accident, the valve lock is necessary;

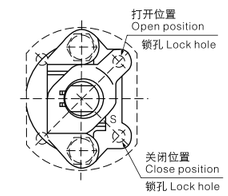

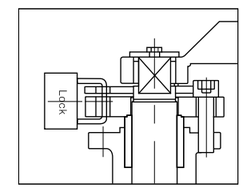

2、防火结构设计，当发生火灾时，当非金属材料制作的阀座及密封件在高温下损坏后，特别设计的金属对金属辅助密封结构，有效的防止介质大量泄露；

Fire safe, the a fire occurs, when the non-metallic materials of the valve seat and seal damaged at high temperatures, a specially designed metal to metal secondary seal structure, effectively prevent the media a lot of leakage;

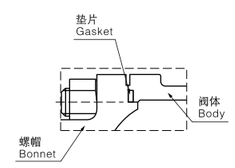

火烧前 Before fire

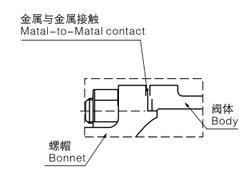

火烧后 After fire

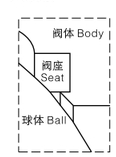

火烧前 Before fire

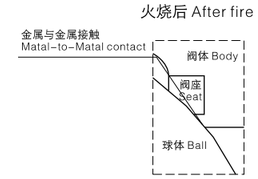

火烧后 After fire

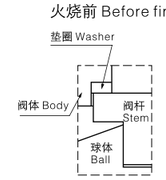

火烧前 Before fire

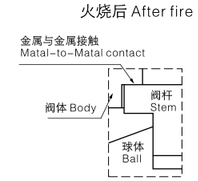

火烧后 After fire

3、防吹出阀杆结构设计，阀杆采用下装式结构，防止了由于腔内压力异常升高而迫使阀杆飞出造成事故；PTFE止推垫片，确保阀杆与阀体之间平滑运转；

Anti-blow out stem design, stem the use of downloading structure, preventing the abnormal increase as intraluminal pressure forced Blow Out the accident; PTFE thrust washers to ensure smooth between the stem and valve operation;

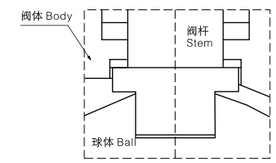

4、防静电结构设计，确保在易燃易爆工况上的安全使用；

Anti-static design, to ensure that working conditions in the explosive on the safe use;

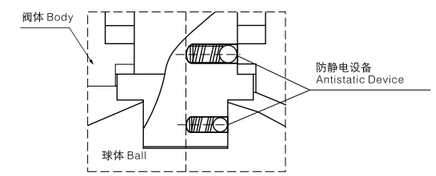

5、体腔泄压结构设计，确保阀门密封可靠，及延长其使用寿命；

Body cavity pressure relief design to ensure reliable sealing valve, And extending its life;

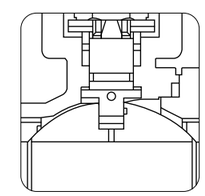

标准的ISO-5211接盘设计，方便客户随时更换操作方式。
Standard ISO-5211 disk access design to facilitate customer replacement operation at any time.

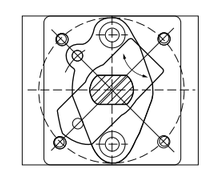

设有ISO 5211标准执行连接盘
Connection with the implementation of ISO 5211 standard plate

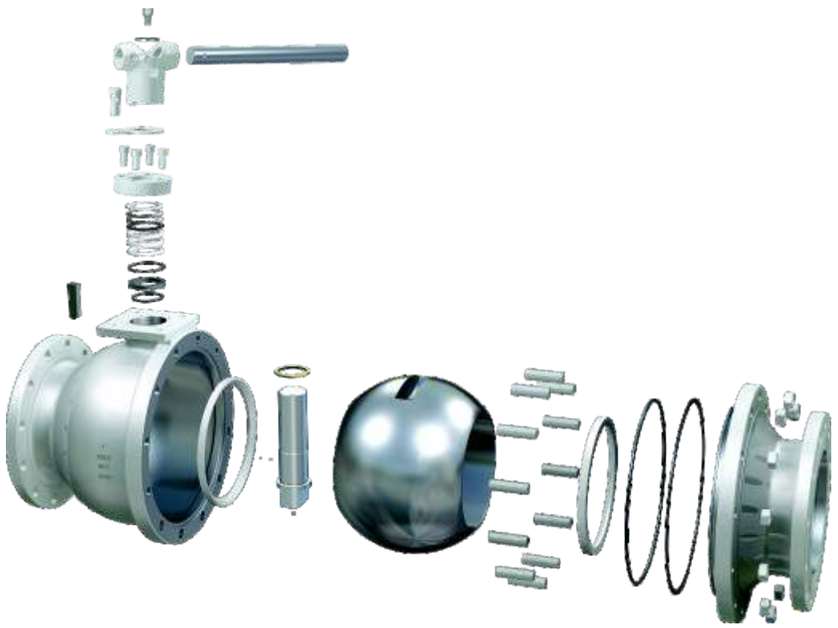

技术规范 Technical Specifications

设计依据 Design Basis		GB	API		ASME
设计标准 Design Standard		GB/T 12237	API 608	API 6D	ASME B16.34
结构长度 Face-to-Face		GB/T 12221	ASME B16.10	API 6D	ASME B16.10
连接端* Connection End	法兰连接 Flanged	GB/T 9113	ASME B16.5		
	对焊连接 Butt-Welding	GB/T 12224	ASME B16.25		
材料要求 Material		NACE MR0175			
试验和检验 Test and Inspection		JB/T 9092	API 598	API 6D	ASME B16.34
耐火试验 Fire Test		JB/T 6899	API 6FA/API607		

* 阀门连接端对焊端尺寸可按用户要求设计制造。
The dimension of welded end connection can be designed and manufactured according to the buyers's request.

主要零件与材质 Main Parts and Materials

常规型 Conventional Type

零件名称 Part Name	碳钢 Carbon Steel		低温钢, Low Temp. Steel		不锈钢 Stainless Steel	
	GB	ASTM	GB	ASTM	GB	ASTM
阀体 Body	WCB	A216-WCB	LCB LCC	A352-LCB A352-LCC	CF8 CF8M	A351-CF8 A351-CF8M
螺栓/螺母 Bolt/Nut	35CrMo 45	A193-B7 A194-2H	304 304	A320-L7 A194-4	304 304	A193-B8 A194-8
球体 Ball	25+ENP	A105+ENP	0Cr18Ni9	A350-LF2+ENP	0Cr18Ni9 00Cr17Ni12Mo2	A182-F304 A182-F316
阀杆 Stem	1Cr13 2Cr13	A276-410 A276-420	304	A350-LF2 A276-304	304 316	A276-304 A276-316
阀座 Seat	Standard: PTFE OR NYLON Special: PEEK OR DEVLON		Standard: PTFE OR NYLON Special: PEEK OR DEVLON		Standard: PTFE OR NYLON Special: PEEK OR DEVLON	
O型圈 O-Ring	NBR OR VITON		NBR OR VITON		VITON	
垫片 Gasket	柔性石墨+不锈钢 Graphite+ Stainless steel		柔性石墨+不锈钢 Graphite+ Stainless steel		柔性石墨+不锈钢 Graphite+ Stainless steel	

主要零件与材质 Main Parts and Materials

抗硫型：Sulfur-resisting type

零件名称 Part Name	碳钢 Carbon Steel		低温钢, Low Temp. Steel		不锈钢 Stainless Steel	
	GB	ASTM	GB	ASTM	GB	ASTM
阀体 Body	WCB	A216-WCB	LCB LCC	A352-LCB A352-LCC	CF8 CF8M	A351-CF8 A351-CF8M
螺栓/螺母 Bolt/Nut	35CrMo 45	A193-B7 A194-2H	304 304	A320-L7 A194-4	304 304	A193-B8 A194-8
球体 Ball	25+ENP	A105+ENP	0Cr18Ni9	A350-LF2+ENP	0Cr18Ni9 00Cr17Ni12Mo2	A182-F304 A182-F316
阀杆 Stem	17-4PH		For use at low temperatures resilient steels.		304 316	A276-304 A276-316
阀座 Seat	Standard: PTFE OR NYLON Special: PEEK OR DEVLON		Standard: PTFE OR NYLON Special: PEEK OR DEVLON		Standard: PTFE OR NYLON Special: PEEK OR DEVLON	
O型圈 O-Ring	NBR OR VITON		NBR OR VITON		VITON	
垫片 Gasket	柔性石墨+不锈钢 Graphite+ Stainless steel		柔性石墨+不锈钢 Graphite+ Stainless steel		柔性石墨+不锈钢 Graphite+ Stainless steel	

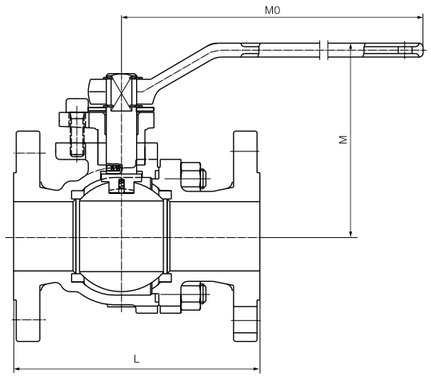

手动操作，MA
Lever-Operated

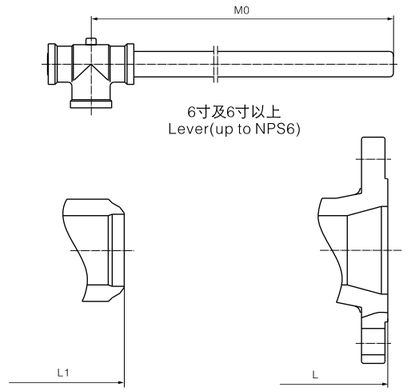

焊接端 BW
Welding end BW

缩径流道 RB
Reduced runoff Road RB

主要外形尺寸 Main External Dimensions

Class 150

全通径 Full Bore　　单位Unit：mm

DN	NPS	L (RF)	L1 (BW)	手柄 MA		WT(Kg)
				M	M0	
15	1/2	108	140	85	140	3
20	3/4	117	152	90	140	4
25	1	127	165	99	150	5
40	$1^1/_2$	165	190	126	200	8
50	2	178	216	140	250	12
65	$2^1/_2$	191	241	165	300	18
80	3	203	283	178	350	24
100	4	229	305	230	500	38
150	6	394	457	310	800	82
200	8	457	521	350	1000	145
250	10	533	559	400	1000	235

缩径 Reduced Bore　　单位Unit：mm

DN × DN'	NPS × NPS'	L (RF)	L1 (BW)	手柄 MA		WT(Kg)
				M	M0	
20 × 15	3/4 × 1/2	117	152	85	140	3.5
25 × 20	1 × 3/4	127	165	90	140	5
40 × 25	$1^1/_2$ × 1	165	190	99	150	6
50 × 40	2 × $1^1/_2$	178	216	126	200	9.7
80 × 50	3 × 2	203	283	140	250	18
100 × 80	4 × 3	229	305	178	350	32
150 × 100	6 × 4	394	457	230	500	60
200 × 150	8 × 6	457	521	310	800	120
250 × 200	10 × 8	533	559	350	1000	200

PN25/PN40/Class300

全通径 Full Bore　　单位Unit：mm

DN	NPS	L (RF)	L1 (BW)	手柄 MA		WT(Kg)
				M	M0	
15	1/2	140	140	85	140	3
20	3/4	152	152	90	140	5
25	1	165	165	99	150	6
40	$1^1/_2$	190	190	126	200	11
50	2	216	216	140	250	16
65	$2^1/_2$	241	241	165	300	24
80	3	283	283	178	350	34
100	4	305	305	230	500	56
150	6	457	457	310	800	125
200	8	502	521	350	1000	222

缩径 Reduced Bore　　单位Unit：mm

DN × DN'	NPS × NPS'	L (RF)	L1 (BW)	手柄 MA		WT(Kg)
				M	M0	
20 × 15	3/4 × 1/2	152	152	85	140	3.8
25 × 20	1 × 3/4	165	165	90	140	5.6
40 × 25	$1^1/_2$ × 1	190	190	99	150	10.2
50 × 40	2 × $1^1/_2$	216	216	126	200	15
80 × 50	3 × 2	283	283	140	250	31.5
100 × 80	4 × 3	305	305	178	350	57
150 × 100	6 × 4	457	457	230	500	83
200 × 150	8 × 6	502	521	310	800	191

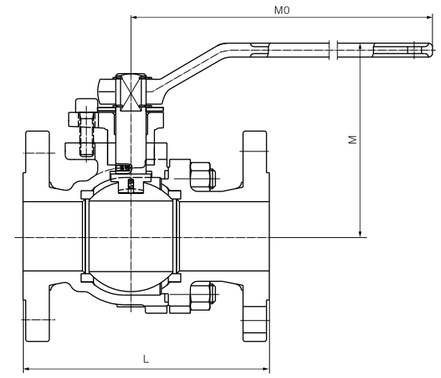

手动操作，MA
Lever-Operated

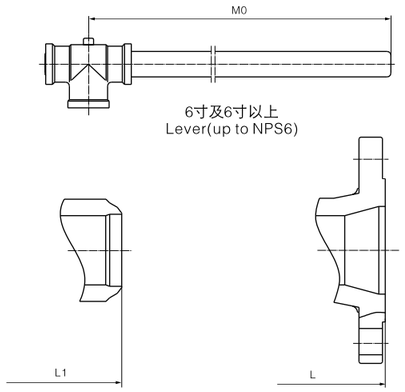

焊接端 BW
Welding end BW

缩径流道 RB
Reduced runoff Road RB

主要外形尺寸 Main External Dimensions

PN100/PN110/Class600

全通径 Full Bore　　单位Unit：mm

DN	NPS	L (RF)	L1 (BW)	L2 (RTJ)	手柄 MA		WT(Kg)
					M	M0	
15	1/2	165	165	163.5	79	140	5
20	3/4	191	191	191	83	140	7
25	1	216	216	216	114	200	9
40	$1^1/_2$	241	241	241	125	250	17
50	2	292	292	295	156	300	25
65	$2^1/_2$	330	330	333	172	350	42
80	3	356	356	359	220	500	56
100	4	432	432	435	250	650	85

缩径 Reduced Bore　　单位Unit：mm

DN × DN'	NPS × NPS'	L (RF)	L1 (BW)	L2 (RTJ)	手柄 MA		WT(Kg)
					M	M0	
20 × 15	3/4 × 1/2	191	191	191	79	140	4
25 × 20	1 × 3/4	216	216	216	83	140	6.2
40 × 25	$1^1/_2$ × 1	241	241	241	114	200	12.5
50 × 40	2 × $1^1/_2$	292	292	295	125	250	18.2
80 × 50	3 × 2	356	356	359	156	300	35
100 × 80	4 × 3	432	432	435	220	500	65
150 × 100	6 × 4	559	559	562	250	650	106

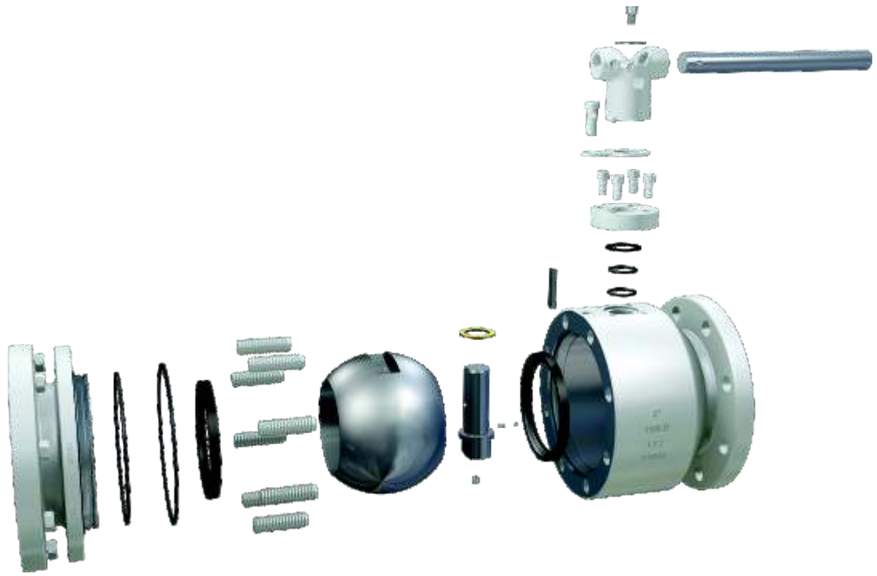

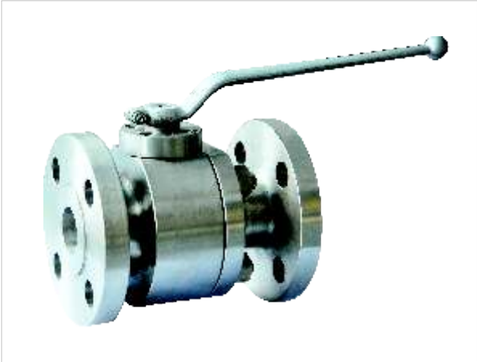

技术规范 Technical Specifications

设计依据 Design Basis		GB	API		ASME
设计标准 Design Standard		GB/T 12237	API 608	API 6D	ASME B16.34
结构长度 Face-to-Face		GB/T 12221	ASME B16.10	API 6D	ASME B16.10
连接端* Connection End	法兰连接 Flanged	GB/T 9113	ASME B16.5		
	对焊连接 Butt-Welding	GB/T 12224	ASME B16.25		
材料要求 Material		NACE MR0175			
试验和检验 Test and Inspection		JB/T 9092	API 598	API 6D	ASME B16.34
耐火试验 Fire Test		JB/T 6899	API 6FA/API607		

* 阀门连接端对焊端尺寸可按用户要求设计制造。
The dimension of welded end connection can be designed and manufactured according to the buyers's request.

主要零件与材质 Main Parts and Materials

常规型 Conventional Type

零件名称 Part Name	碳钢 Carbon Steel		低温钢, Low Temp. Steel		不锈钢 Stainless Steel	
	GB	ASTM	GB	ASTM	GB	ASTM
阀体 Body	25	A105	304	A350-LF2	0Cr18Ni9 00Cr17Ni12Mo2	A182-F304 A182-F316
螺栓/螺母 Bolt/Nut	35CrMo 45	A193-B7 A194-2H	304 304	A320-L7 A194-4	304 304	A193-B8 A194-8
球体 Ball	25+ENP	A105+ENP	0Cr18Ni9	A350-LF2+ENP	0Cr18Ni9 00Cr17Ni12Mo2	A182-F304 A182-F316
阀杆 Stem	1Cr13 2Cr13	A276-410 A276-420	304	A350-LF2 A276-304	304 316	A276-304 A276-316
阀座 Seat	Standard: PTFE OR NYLON Special: PEEK OR DEVLON		Standard: PTFE OR NYLON Special: PEEK OR DEVLON		Standard: PTFE OR NYLON Special: PEEK OR DEVLON	
O型圈 O-Ring	NBR OR VITON		NBR OR VITON		VITON	
垫片 Gasket	柔性石墨+不锈钢 Graphite+ Stainless steel		柔性石墨+不锈钢 Graphite+ Stainless steel		柔性石墨+不锈钢 Graphite+ Stainless steel	

主要零件与材质 Main Parts and Materials

抗硫型：Sulfur-resisting type

零件名称 Part Name	碳钢 Carbon Steel		低温钢, Low Temp. Steel		不锈钢 Stainless Steel	
	GB	ASTM	GB	ASTM	GB	ASTM
阀体 Body	25	A105	304	A352-LCB A352-LCC	0Cr18Ni9 00Cr17Ni12Mo2	A351-CF8M A351-CF3M
螺栓/螺母 Bolt/Nut	35CrMo 45	A193-B7 A194-2H	304 304	A320-L7 A194-4	304 304	A193-B8 A194-8
球体 Ball	25+ENP	A105+ENP	0Cr18Ni9	A350-LF2+ENP	0Cr18Ni9 00Cr17Ni12Mo2	A182-F304 A182-F316
阀杆 Stem	17-4PH		For use at low temperatures resilient steels.		304 316	A276-304 A276-316
阀座 Seat	Standard: PTFE OR NYLON Special: PEEK OR DEVLON		Standard: PTFE OR NYLON Special: PEEK OR DEVLON		Standard: PTFE OR NYLON Special: PEEK OR DEVLON	
O型圈 O-Ring	NBR OR VITON		NBR OR VITON		VITON	
垫片 Gasket	柔性石墨+不锈钢 Graphite+ Stainless steel		柔性石墨+不锈钢 Graphite+ Stainless steel		柔性石墨+不锈钢 Graphite+ Stainless steel	

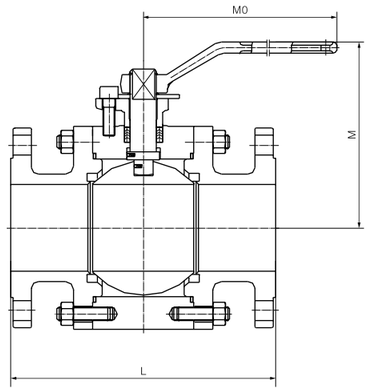

手动浮动球阀 MA
Hand-operated Floating Ball Valve MA

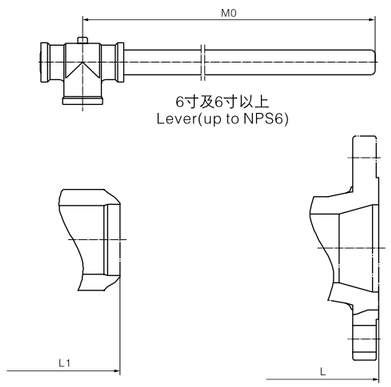

焊接端 BW
Welding end BW

缩径流道 RB
Reduced runoff Road RB

主要外形尺寸 Main External Dimensions

Class 150

全通径 Full Bore 单位Unit：mm

DN	NPS	L (RF)	L1 (BW)	手柄 MA		WT(Kg)
				M	M0	
15	1/2	108	140	82	140	3
20	3/4	117	152	87	140	4
25	1	127	165	92	150	6
40	$1^1/_2$	165	190	108	200	12
50	2	178	216	119	250	15
65	$2^1/_2$	191	241	150	300	19
80	3	203	283	175	350	22
100	4	229	305	220	500	46
150	6	394	457	280	800	110
200	8	457	521	320	1000	175
250	10	533	559	380	1000	*

缩径 Reduced Bore 单位Unit：mm

DN × DN'	NPS × NPS'	L (RF)	L1 (BW)	手柄 MA		WT(Kg)
				M	M0	
20 × 15	3/4 × 1/2	117	152	82	140	3.5
25 × 20	1 × 3/4	127	165	87	140	5
40 × 25	$1^1/_2$ × 1	165	190	92	150	11
50 × 40	2 × $1^1/_2$	178	216	108	200	13
80 × 50	3 × 2	203	283	119	250	20
100 × 80	4 × 3	229	305	175	350	42
150 × 100	6 × 4	394	457	220	500	80
200 × 150	8 × 6	457	521	280	800	120
250 × 200	10 × 8	533	559	320	1000	190

PN25/PN40/Class300

全通径 Full Bore 单位Unit：mm

DN	NPS	L (RF)	L1 (BW)	手柄 MA		KG
				M	M0	
15	1/2	140	140	82	140	4
20	3/4	152	152	87	140	6
25	1	165	165	92	150	10
40	$1^1/_2$	190	190	108	200	18
50	2	216	216	119	250	22
65	$2^1/_2$	241	241	150	300	28
80	3	283	283	175	350	38
100	4	305	305	220	500	78
150	6	457	457	280	800	148
200	8	502	521	320	1000	196

缩径 Reduced Bore 单位Unit：mm

DN × DN'	NPS × NPS'	L (RF)	L1 (BW)	手柄 MA		WT(Kg)
				M	M0	
20 × 15	3/4 × 1/2	152	152	82	140	5
25 × 20	1 × 3/4	165	165	87	140	7
40 × 25	$1^1/_2$ × 1	190	190	92	150	16
50 × 40	2 × $1^1/_2$	216	216	108	200	19
80 × 50	3 × 2	283	283	119	250	30
100 × 80	4 × 3	305	305	175	350	52
150 × 100	6 × 4	457	457	220	500	100
200 × 150	8 × 6	502	521	280	800	180

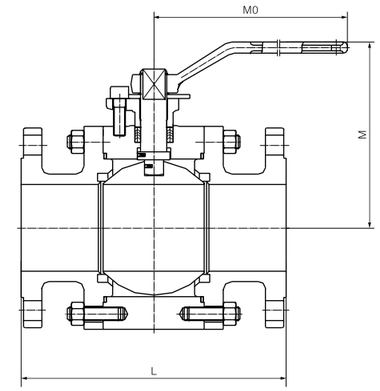

手动浮动球阀 MA
Hand-operated Floating Ball Valve MA

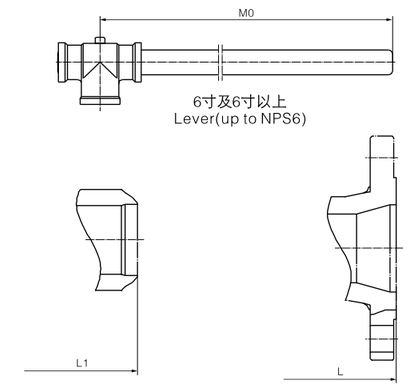

焊接端 BW
Welding end BW

缩径流道 RB
Reduced runoff Road RB

主要外形尺寸 Main External Dimensions

PN100/PN110/Class 600

全通径 Full Bore 单位Unit：mm

DN	NPS	L (RF)	L1 (BW)	L2 (RTJ)	手柄 MA		WT(Kg)
					M	M0	
15	1/2	165	165	163.5	82	140	5
20	3/4	191	191	191	87	140	7
25	1	216	216	216	98	200	10
40	$1^1/_2$	241	241	241	118	250	15
50	2	292	292	295	130	300	22
65	$2^1/_2$	330	330	333	158	350	28
80	3	356	356	359	180	500	38
100	4	432	432	435	220	650	78

缩径 Reduced Bore 单位Unit：mm

DN × DN'	NPS × NPS'	L (RF)	L1 (BW)	L2 (RTJ)	手柄 MA		WT(Kg)
					M	M0	
20 × 15	3/4 × 1/2	191	191	191	82	140	7
25 × 20	1 × 3/4	216	216	216	87	140	9
40 × 25	$1^1/_2$ × 1	241	241	241	98	200	17
50 × 40	2 × $1^1/_2$	292	292	295	118	250	20
80 × 50	3 × 2	356	356	359	130	300	33
100 × 80	4 × 3	432	432	435	180	500	75
150 × 100	6 × 4	559	559	562	220	650	150

PN150/PN160/Class900 PN250/PN260/Class1500

全通径 Full Bore 单位Unit：mm

DN	NPS	L (RF)	L1 (BW)	L2 (RTJ)	手柄 MA		WT(Kg)
					M	M0	
15	1/2	216	216	216	85	140	10
20	3/4	229	229	229	90	140	14
25	1	254	254	254	98	200	17
40	$1^1/_2$	305	305	305	118	250	23
50	2	368	368	371	130	300	34
65	$2^1/_2$	419	419	422	160	350	40

缩径 Reduced Bore 单位Unit：mm

DN × DN'	NPS × NPS'	L (RF)	L1 (BW)	L2 (RTJ)	手柄 MA		WT(Kg)
					M	M0	
20 × 15	3/4 × 1/2	229	229	229	85	140	11
25 × 20	1 × 3/4	254	254	254	90	140	15
40 × 25	$1^1/_2$ × 1	305	305	305	98	200	25
50 × 40	2 × $1^1/_2$	368	368	371	118	250	30

PN420/Class2500

全通径 Full Bore 单位Unit：mm

DN	NPS	L (RF)	L1 (BW)	L2 (RTJ)	手柄 MA		WT(Kg)
					M	M0	
15	1/2	264	264	264	81	200	12
20	3/4	273	273	273	84	200	16
25	1	308	308	308	107	300	20

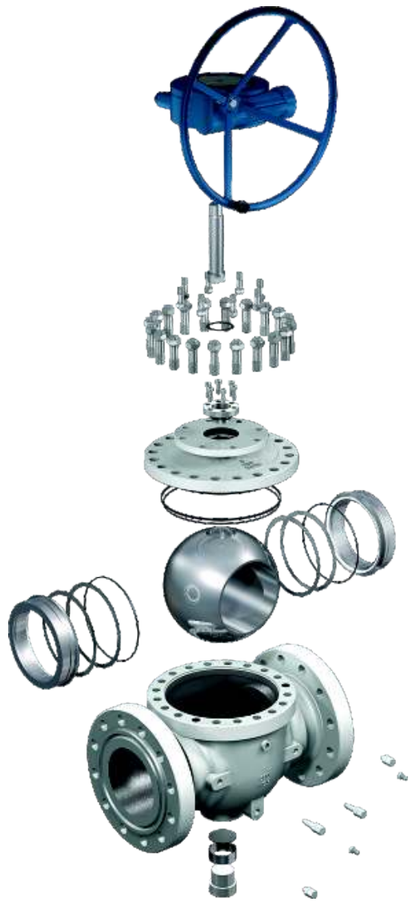

技术规范 Technical Specifications

设计依据 Design Basis		GB		API		ASME
设计标准 Design Standard		GB/T 12237	GB/T 19672	API 608	API 6D	ASME B16.34
结构长度 Face-to-Face		GB/T 12221	GB/T 19672	ASME B16.10	API 6D	ASME B16.10
连接端* Connection End	法兰连接 Flanged	GB/T 9113		ASME B16.5/MSS SP-44/ASME B16.47[a]		
	对焊连接 Butt-Welding	GB/T 12224		ASME B16.25		
材料要求 Material		NACE MR0175				
试验和检验 Test and Inspection		JB/T 9092	GB/T 19672	API 598	API 6D	ASME B16.34
耐火试验 Fire Test		JB/T 6899		API 6FA/API607		

* 阀门连接端对焊端尺寸可按用户要求设计制造。
The dimension of welded end connection can be designed and manufactured according to the buyers's request.

a.MSS SP-44 for size 22.
ASME B16.47 Series A for size 26 & over.

主要零件与材质 Main Parts and Materials

常规型 Conventional Type

零件名称 Part Name	碳钢 Carbon steel		低温钢, Low Temp. Steel		不锈钢 Stainless steel	
	GB	ASTM	GB	ASTM	GB	ASTM
阀体 Body	WCB	A216-WCB	LCB LCC	A352-LCB A352-LCC	CF8 CF8M	A351-CF8 A351-CF8M
螺栓/螺母 Bolt/Nut	35CrMo 45	A193-B7 A194-2H	304 304	A320-L7 A194-4	304 304	A193-B8 A194-8
球体 Ball	25+ENP	A105+ENP	0Cr18Ni9	A350-LF2+ENP	0Cr18Ni9 00Cr17Ni12Mo2	A182-F304 A182-F316
阀杆 Stem	1Cr13 2Cr13	A276-410 A276-420	304	A350-LF2 A276-304	304 316	A276-304 A276-316
阀座 Seat	25+ENP	A105+ENP	304	A350 LF2+ENP	0Cr18Ni9 00Cr17Ni12Mo2	A182-F304 A182-F316
阀座密封圈 Seat insert	Standard:PTFE/NYLON Special:PEEK/DEVLON/VITON		Standard:PTFE/NYLON Special:PEEK/DEVLON/VITON		Standard:PTFE/NYLON Special:PEEK/DEVLON/VITON	
O型圈 O-Ring	NBR OR VITON		NBR OR VITON		VITON	
垫片 Gasket	柔性石墨+不锈钢 Graphite+ Stainless steel		柔性石墨+不锈钢 Graphite+ Stainless steel		柔性石墨+不锈钢 Graphite+ Stainless steel	

主要零件与材质 Main Parts and Materials

抗硫型：Sulfur-resisting type

零件名称 Part Name	碳钢 Carbon steel		低温钢, Low Temp. Steel		不锈钢 Stainless steel	
	GB	ASTM	GB	ASTM	GB	ASTM
阀体 Body	WCB	A216-WCB	LCB LCC	A352-LCB A352-LCC	CF8 CF8M	A351-CF8 A351-CF8M
螺栓/螺母 Bolt/Nut	35CrMo 45	A193-B7M A194-2H	304 304	A320-L7 A194-4	304 304	A193-B8 A194-8
球体 Ball	25+ENP	A105+ENP	0Cr18Ni9	A350-LF2+ENP	0Cr18Ni9 00Cr17Ni12Mo2	A182-F304 A182-F316
阀杆 Stem	17-4PH		For use at low temperatures resilient steels.		304 316	A276-304 A276-316
阀座 Seat	25+ENP	A105+ENP	304	A350 LF2+ENP	0Cr18Ni9 00Cr17Ni12Mo2	A182-F304 A182-F316
阀座密封圈 Seat insert	Standard:PTFE/NYLON Special:PEEK/DEVLON/VITON		Standard:PTFE/NYLON Special:PEEK/DEVLON/VITON		Standard:PTFE/NYLON Special:PEEK/DEVLON/VITON	
O型圈 O-Ring	NBR OR VITON		NBR OR VITON		VITON	
垫片 Gasket	柔性石墨+不锈钢 Graphite+ Stainless steel		柔性石墨+不锈钢 Graphite+ Stainless steel		柔性石墨+不锈钢 Graphite+ Stainless steel	

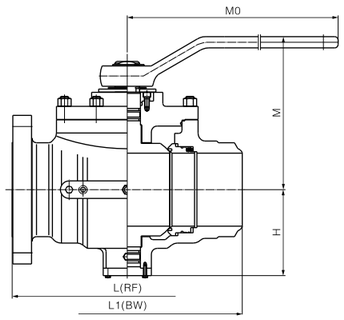

手动操作，MA
Lever-Operated

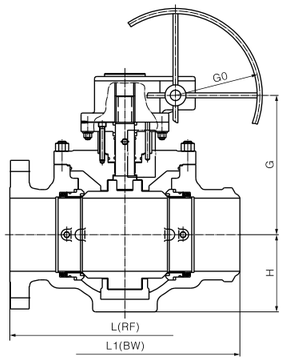

蜗轮传动操作，GA
Worm Gear Operated

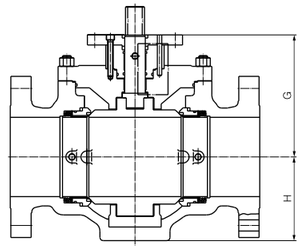

光杆带配盘，BSMP
Bare Stem with Mounting Pad

主要外形尺寸 Main External Dimensions

Class 150

全通径 Full Bore　　单位Unit：mm

DN	NPS	L (RF)	L1 (BW)	L2 (RTJ)	手柄 MA		蜗轮传动 GA		C	H	WT(Kg)	Torque (N·M)
					M	M0	G	G0				
40	$1^1/_2$	260	260	264	206	300	--	--	145	63	28	40
50	2	292	292	295	231	300	--	--	170	78	40	57
65	$2^1/_2$	330	330	333	245	400	--	--	182	90	48	71
80	3	356	356	359	273	450	--	--	212	100	65	95
100	4	432	432	435	297	500	--	--	236	120	110	192
150	6	559	559	562	351	800	338	300	271	162	210	485
200	8	660	660	664	388	1000	375	400	308	207	375	832
250	10	787	787	791	--	--	415	400	348	244	462	1105
300	12	838	838	841	--	--	452	500	385	290	660	1655
350	14	889	889	892	--	--	473	500	398	370	930	2695
400	16	991	991	994	--	--	498	600	423	405	1354	3164
450	18	1092	1092	1095	--	--	545	600	470	445	2100	3793
500	20	1194	1194	1200	--	--	603	600	528	540	2680	5500
550	22	1295	1295	1305	--	--	688	600	578	550	3400	6650
600	24	1397	1397	1407	--	--	742	700	630	595	4180	7529
650	26	1448	1448	1461	--	--	750	700	635	640	4850	8693
700	28	1549	1549	1562	--	--	797	700	685	680	5850	10770
750	30	1651	1651	1664	--	--	835	700	720	745	6400	12365
800	32	1778	1778	1794	--	--	896	700	760	770	7850	14070
850	34	1930	1930	1946	--	--	926	700	790	800	8600	21148
900	36	2083	2083	2099	--	--	950	700	810	820	9850	22987
1000	40	2337	2337	2366	--	--	1036	700	900	850	14500	26059
1050	42	2439	2439	2467	--	--	1066	800	930	890	16150	28149
1200	48	2540	2540	2540	--	--	1227	800	1067	970	25000	42776
1400	56	2949	2949	2949	--	--	1420	800	1220	1120	38000	65654
1500	60	--	--	--	--	--	1520	1000	1300	1190	44000	85654

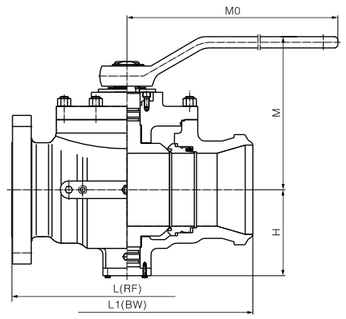

手动操作，MA
Lever-Operated

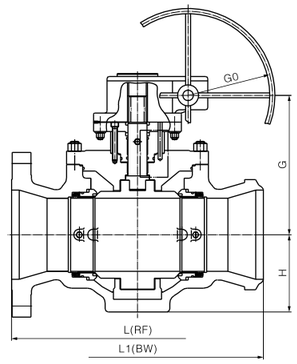

蜗轮传动操作，GA
Worm Gear Operated

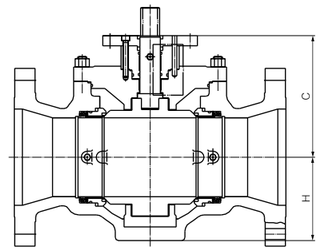

光杆带配盘，BSMP
Bare Stem with Mounting Pad

主要外形尺寸 Main External Dimensions

Class 150

缩径 Reduced Bore　　单位Unit：mm

DN×DN'	NPS×NPS'	L (RF)	L1 (BW)	L2 (RTJ)	手柄 MA		蜗轮传动 GA		C	H	WT(Kg)	Torque (N·M)
					M	M0	G	G0				
50×40	$2\times1^1/_2$	292	292	295	206	300	--	--	145	63	30	40
80×50	3×2	356	356	359	231	300	--	--	170	78	50	57
100×80	4×3	432	432	435	273	450	--	--	212	100	80	95
150×100	6×4	559	559	562	297	500	--	--	236	120	130	192
200×150	8×6	660	660	664	351	800	338	300	271	162	232	485
250×200	10×8	787	787	791	388	1000	375	400	308	207	422	832
300×250	12×10	838	838	841	--	--	415	400	348	244	495	1105
350×250	14×10	889	889	892	--	--	415	400	348	244	550	1105
400×300	16×12	991	991	994	--	--	452	500	385	290	800	1655
450×350	18×14	1092	1092	1095	--	--	473	500	398	370	1000	2695
500×400	20×16	1194	1194	1200	--	--	498	600	423	405	1950	3164
600×500	24×20	1397	1397	1407	--	--	603	600	528	540	3160	5500
750×600	30×24	1651	1651	1664	--	--	742	700	630	595	4800	7529
900×750	36×30	2083	2083	2099	--	--	835	700	720	745	7860	12365

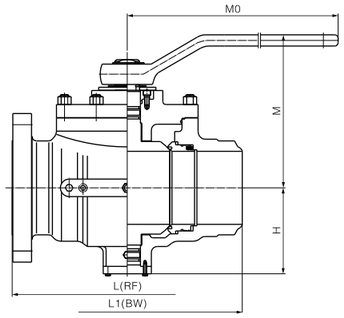

手动操作，MA
Lever-Operated

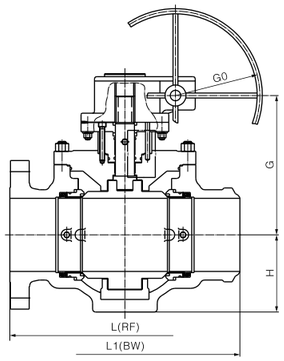

蜗轮传动操作，GA
Worm Gear Operated

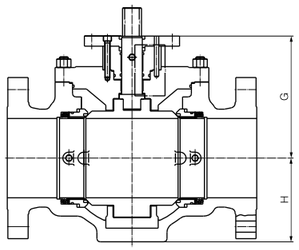

光杆带配盘，BSMP
Bare Stem with Mounting Pad

主要外形尺寸 Main External Dimensions

PN25/PN40/PN50/Class300

全通径 Full Bore　　单位Unit：mm

DN	NPS	L (RF)	L1 (BW)	L2 (RTJ)	手柄 MA		蜗轮传动 GA		C	H	WT(Kg)	Torque (N·M)
					M	M0	G	G0				
40	$1^1/_2$	260	260	264	206	300	--	--	145	63	30	50
50	2	292	292	295	231	300	--	--	170	78	40	99
65	$2^1/_2$	330	330	333	245	400	--	--	182	90	47	124
80	3	356	356	359	273	450	--	--	212	100	65	212
100	4	432	432	435	297	500	--	--	236	120	125	335
150	6	559	559	562	351	800	338	300	271	162	277	544
200	8	660	660	664	388	1000	375	400	308	207	407	1250
250	10	787	787	791	--	--	423	400	348	244	484	1736
300	12	838	838	841	--	--	460	500	385	290	664	2388
350	14	889	889	892	--	--	481	500	398	370	1060	3224
400	16	991	991	994	--	--	515	600	436	405	1450	5139
450	18	1092	1092	1095	--	--	555	600	478	445	2200	7970
500	20	1194	1194	1200	--	--	648	600	536	537	3400	10570
550	22	1295	1295	1305	--	--	712	600	600	550	1950	12140
600	24	1397	1397	1407	--	--	758	700	645	595	4400	17240
650	26	1448	1448	1461	--	--	786	700	650	640	5410	20340
700	28	1549	1549	1562	--	--	845	700	708	680	6640	25069
750	30	1651	1651	1664	--	--	856	700	720	745	7780	27640
800	32	1778	1778	1794	--	--	921	700	785	770	9550	29550
850	34	1930	1930	1946	--	--	951	700	815	800	11230	31558
900	36	2083	2083	2099	--	--	1008	700	848	800	13180	35170
1000	40	2337	2337	2366	--	--	1095	700	935	850	17310	39115
1050	42	2439	2439	2467	--	--	1125	800	965	890	19600	42414
1200	48	2540	2540	2540	--	--	1330	800	1130	970	26000	71868
1400	56	2949	2949	2949	--	--	1520	1000	1310	1120	45000	108550

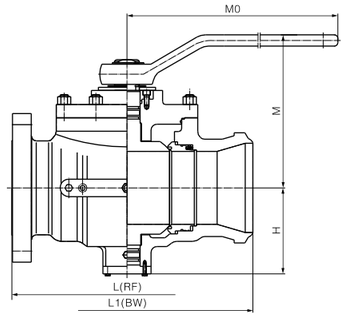

手动操作，MA
Lever-Operated

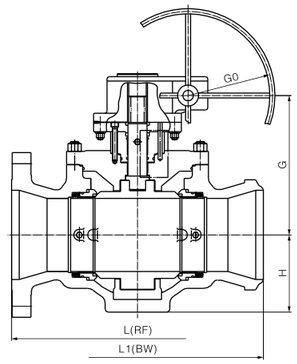

蜗轮传动操作，GA
Worm Gear Operated

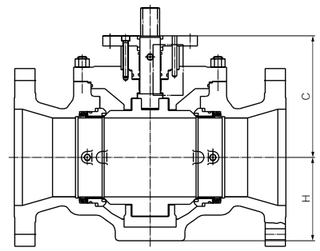

光杆带配盘，BSMP
Bare Stem with Mounting Pad

主要外形尺寸 Main External Dimensions

PN25/PN40/PN50/Class300

缩径 Reduced Bore　　单位Unit：mm

DN×DN'	NPS×NPS'	L (RF)	L1 (BW)	L2 (RTJ)	手柄 MA		蜗轮传动 GA		C	H	WT(Kg)	Torque (N·M)
					M	M0	G	G0				
50×40	$2\times1^1/_2$	292	292	295	206	300	--	--	145	63	32	50
80×50	3×2	356	356	359	231	300	--	--	170	78	49	99
100×80	4×3	432	432	435	273	450	--	--	212	100	85	212
150×100	6×4	559	559	562	297	500	--	--	236	120	145	335
200×150	8×6	660	660	664	351	800	338	300	271	162	282	544
250×200	10×8	787	787	791	388	1000	375	400	308	207	438	1250
300×250	12×10	838	838	841	--	--	423	400	348	244	546	1736
350×250	14×10	889	889	892	--	--	423	400	348	244	648	1736
400×300	16×12	991	991	994	--	--	460	500	385	290	970	2388
450×350	18×14	1092	1092	1095	--	--	481	500	398	370	1450	3224
500×400	20×16	1194	1194	1200	--	--	515	600	436	405	2240	5139
600×500	24×20	1397	1397	1407	--	--	648	600	536	537	3530	10570
750×600	30×24	1651	1651	1664	--	--	758	700	645	595	5100	17240
900×750	36×30	2083	2083	2099	--	--	856	700	720	745	8800	27640

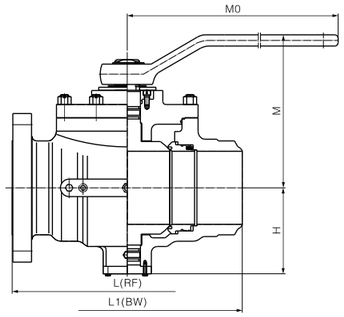

手动操作，MA
Lever-Operated

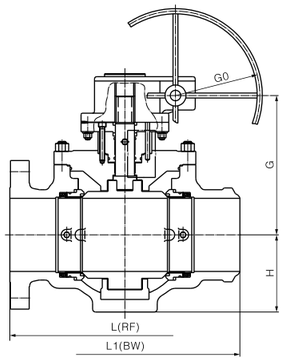

蜗轮传动操作，GA
Worm Gear Operated

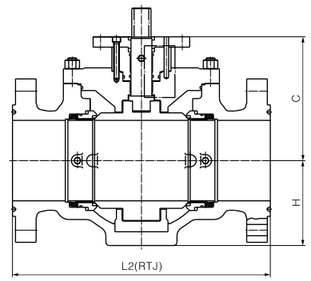

光杆带配盘，BSMP
Bare Stem with Mounting Pad

主要外形尺寸 Main External Dimensions

PN63/PN64/Class400

全通径 Full Bore　　单位Unit：mm

DN	NPS	L (RF)	L1 (BW)	L2 (RTJ)	手柄 MA		蜗轮传动 GA		C	H	WT(Kg)	Torque (N·M)
					M	M0	G	G0				
40	$1^1/_2$	260	260	264	206	400	--	--	145	63	32	98
50	2	292	292	295	231	500	--	--	170	78	42	124
65	$2^1/_2$	330	330	333	243	600	--	--	182	90	55	155
80	3	356	356	359	273	600	--	--	212	100	70	265
100	4	432	432	435	297	800	--	--	236	120	132	467
150	6	559	559	562	376	1000	338	400	271	162	237	650
200	8	660	660	664	--	--	383	400	308	207	424	1806
250	10	787	787	791	--	--	433	500	348	245	592	2638
300	12	838	838	841	--	--	460	500	385	290	790	2929
350	14	889	889	892	--	--	488	500	413	370	1150	3971
400	16	991	991	994	--	--	533	500	458	405	1510	6307
450	18	1092	1092	1095	--	--	600	600	525	450	2350	9165
500	20	1194	1194	1200	--	--	645	600	570	530	3590	12155
550	22	1295	1295	1305	--	--	680	600	605	560	4300	15175
600	24	1397	1397	1407	--	--	799	600	663	595	4680	21550
650	26	1448	1448	1461	--	--	815	700	678	650	5710	25426
700	28	1549	1549	1562	--	--	876	700	740	700	6970	31336
750	30	1651	1651	1664	--	--	936	800	800	800	8480	34550
800	32	1778	1778	1794	--	--	963	800	827	840	10230	36937
850	34	1930	1930	1946	--	--	986	800	850	870	11720	39447
900	36	2083	2083	2099	--	--	1035	800	875	930	13560	43962
1000	40	2337	2337	2366	--	--	1120	800	960	980	17700	48894
1050	42	2439	2439	2467	--	--	1200	800	1040	990	19980	50300
1200	48	2540	2540	2540	--	--	1355	1000	1145	1050	29000	80302
1400	56	2949	2949	2949	--	--	1540	1000	1230	1320	47000	129900

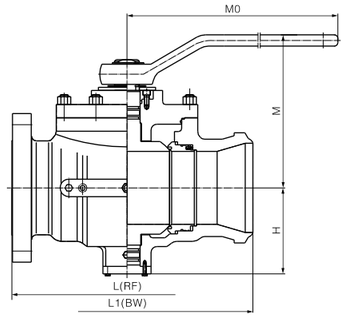

手动操作，MA
Lever-Operated

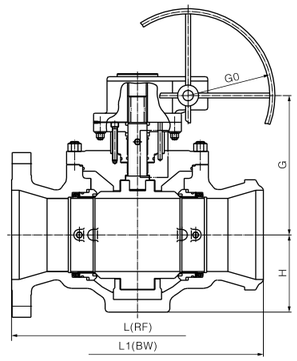

蜗轮传动操作，GA
Worm Gear Operated

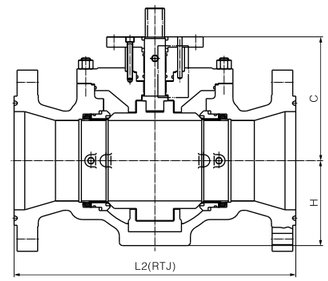

光杆带配盘，BSMP
Bare Stem with Mounting Pad

主要外形尺寸 Main External Dimensions

PN63/PN64/Class400

缩径 Reduced Bore　　单位Unit：mm

DN×DN'	NPS×NPS'	L (RF)	L1 (BW)	L2 (RTJ)	手柄 MA		蜗轮传动 GA		C	H	WT(Kg)	Torque (N·M)
					M	M0	G	G0				
50×40	$2\times1^1/_2$	292	292	295	206	400	--	--	145	63	34	98
80×50	3×2	356	356	359	231	500	--	--	170	78	56	124
100×80	4×3	432	432	435	273	600	--	--	212	100	92	265
150×100	6×4	559	559	562	297	800	--	--	236	120	153	467
200×150	8×6	660	660	664	376	1000	338	400	271	162	309	650
250×200	10×8	787	787	791	--	--	383	400	308	207	506	1806
300×250	12×10	838	838	841	--	--	433	500	348	245	684	2638
350×250	14×10	889	889	892	--	--	433	500	348	245	850	2638
400×300	16×12	991	991	994	--	--	460	500	385	290	1020	2929
450×350	18×14	1092	1092	1095	--	--	488	500	413	370	1420	3971
500×400	20×16	1194	1194	1200	--	--	533	500	458	405	1880	6307
600×500	24×20	1397	1397	1407	--	--	645	600	570	530	4250	12155
750×600	30×24	1651	1651	1664	--	--	799	600	663	595	5880	21550
900×750	36×30	2083	2083	2099	--	--	936	800	800	800	9890	34550

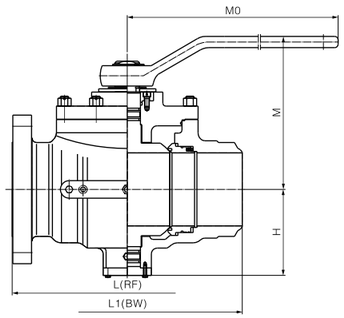

手动操作，MA
Lever-Operated

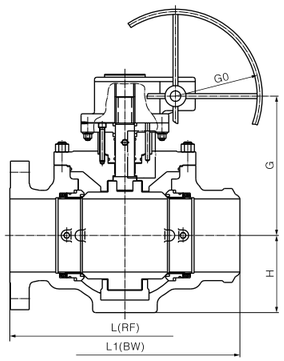

蜗轮传动操作，GA
Worm Gear Operated

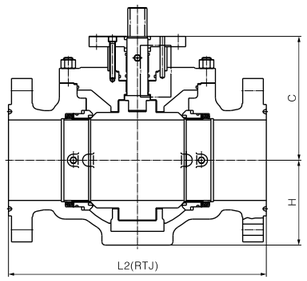

光杆带配盘，BSMP
Bare Stem with Mounting Pad

主要外形尺寸 Main External Dimensions

PN100/PN110/Class600

全通径 Full Bore　　单位Unit：mm

DN	NPS	L (RF)	L1 (BW)	L2 (RTJ)	手柄 MA		蜗轮传动 GA		C	H	WT(Kg)	Torque (N·M)
					M	M0	G	G0				
40	$1^1/_2$	260	260	264	206	400	--	--	145	63	35	130
50	2	292	292	295	231	500	--	--	170	78	50	168
65	$2^1/_2$	330	330	333	243	600	--	--	182	90	59	210
80	3	356	356	359	273	700	--	--	212	100	75	360
100	4	432	432	435	316	800	303	400	236	120	155	572
150	6	559	559	562	--	--	338	400	271	162	290	912
200	8	660	660	664	--	--	383	400	308	207	480	2177
250	10	787	787	791	--	--	423	500	348	244	710	3093
300	12	838	838	841	--	--	460	500	385	290	1050	4282
350	14	889	889	892	--	--	500	500	425	365	1530	7458
400	16	991	991	994	--	--	605	500	493	430	1980	9310
450	18	1092	1092	1095	--	--	642	600	530	475	2460	14693
500	20	1194	1194	1200	--	--	700	600	588	540	3420	20011
550	22	1295	1295	1305	--	--	781	600	645	580	4030	24785
600	24	1397	1397	1407	--	--	815	600	679	620	5010	31226
650	26	1448	1448	1461	--	--	915	700	755	655	6340	35184
700	28	1549	1549	1562	--	--	930	700	770	730	8080	38987
750	30	1651	1651	1664	--	--	1030	800	870	800	9150	41832
800	32	1778	1778	1794	--	--	1055	800	895	830	10760	63865
850	34	1930	1930	1946	--	--	1105	800	945	870	12750	71720
900	36	2083	2083	2099	--	--	1180	1000	1020	900	15200	89020
1000	40	2337	2337	2366	--	--	1325	1000	1165	960	19210	109900
1050	42	2439	2439	2467	--	--	1405	1000	1205	1030	21850	121165
1200	48	2540	2540	2540	--	--	1507	1000	1307	1130	33000	145345
1400	56	2949	2949	2949	--	--	1710	1000	1510	1340	53000	169230

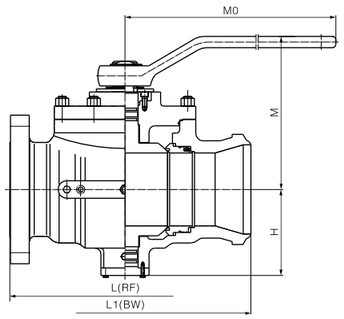

手动操作，MA
Lever-Operated

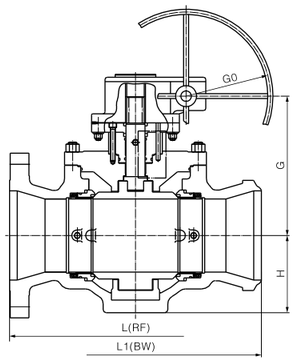

蜗轮传动操作，GA
Worm Gear Operated

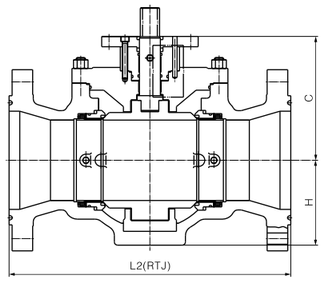

光杆带配盘，BSMP
Bare Stem with Mounting Pad

主要外形尺寸 Main External Dimensions

PN100/PN110/Class600

缩径 Reduced Bore　　单位Unit：mm

DN×DN'	NPS×NPS'	L (RF)	L1 (BW)	L2 (RTJ)	手柄 MA		蜗轮传动 GA		C	H	WT(Kg)	Torque (N·M)
					M	M0	G	G0				
50×40	$2\times1^1/_2$	292	292	295	206	400	--	--	145	63	42	130
80×50	3×2	356	356	359	231	500	--	--	170	78	59	168
100×80	4×3	432	432	435	273	700	--	--	212	100	100	360
150×100	6×4	559	559	562	316	800	303	400	236	120	200	572
200×150	8×6	660	660	664	--	--	338	400	271	162	340	912
250×200	10×8	787	787	791	--	--	383	400	308	207	580	2177
300×250	12×10	838	838	841	--	--	423	500	348	244	850	3093
350×250	14×10	889	889	892	--	--	423	500	348	244	990	3093
400×300	16×12	991	991	994	--	--	460	500	385	290	1350	4282
450×350	18×14	1092	1092	1095	--	--	500	500	425	365	1650	7458
500×400	20×16	1194	1194	1200	--	--	605	500	493	430	2897	9310
600×500	24×20	1397	1397	1407	--	--	700	600	588	540	4160	20011
750×600	30×24	1651	1651	1664	--	--	815	600	679	620	5970	31226
900×750	36×30	2083	2083	2099	--	--	1030	800	870	800	10570	41832

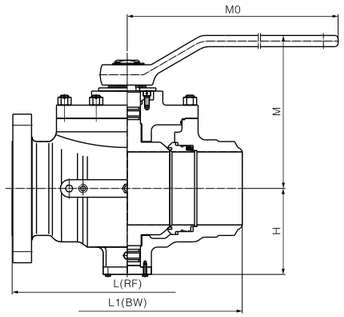

手动操作，MA
Lever-Operated

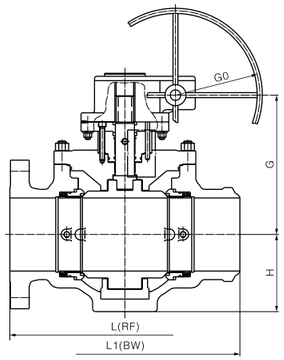

蜗轮传动操作，GA
Worm Gear Operated

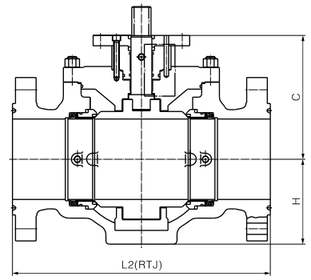

光杆带配盘，BSMP
Bare Stem with Mounting Pad

主要外形尺寸 Main External Dimensions

PN150/PN160/Class900

全通径 Full Bore　　单位Unit：mm

DN	NPS	L (RF)	L1 (BW)	L2 (RTJ)	手柄 MA		蜗轮传动 GA		C	H	WT(Kg)	Torque (N·M)
					M	M0	G	G0				
40	$1^1/_2$	362	362	365	234	650	--	--	173	68	50	163
50	2	368	368	371	251	650	--	--	190	83	67	228
65	$2^1/_2$	419	419	422	278	650	--	--	202	98	75	263
80	3	381	381	384	305	800	--	--	225	110	90	512
100	4	457	457	460	--	--	335	400	268	127	185	946
150	6	610	610	613	--	--	396	400	321	170	380	1784
200	8	737	737	740	--	--	436	500	361	225	620	4116
250	10	838	838	841	--	--	445	500	368	260	880	5910
300	12	965	965	968	--	--	535	500	460	310	1360	10137
350	14	1029	1029	1038	--	--	590	500	478	395	1910	14141
400	16	1130	1130	1140	--	--	625	600	513	450	2790	18866
450	18	1219	1219	1232	--	--	702	600	590	505	3740	22400
500	20	1321	1321	1334	--	--	801	600	665	565	4600	28544
550	22	1423	1423	1439	--	--	910	700	750	620	6150	42427
600	24	1549	1549	1568	--	--	953	700	793	660	7850	43276
650	26	1651	1651	1673	--	--	995	700	835	685	10900	48580
700	28	1753	1753	1775	--	--	1053	800	893	740	12500	60000
750	30	1880	1880	1902	--	--	1110	800	950	830	14150	76000
800	32	2032	2032	2054	--	--	1160	1000	1000	880	17100	90195
850	34	2159	2159	2188	--	--	1203	1000	1043	930	18570	100460
900	36	2286	2286	2315	--	--	1260	1000	1096	960	21000	131875

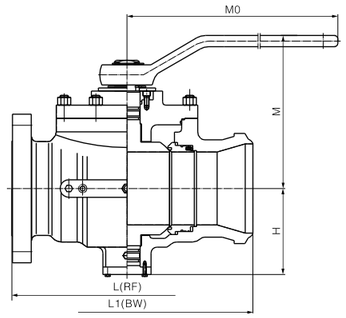

手动操作，MA
Lever-Operated

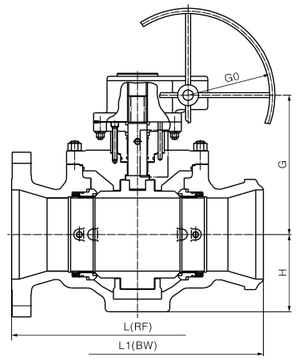

蜗轮传动操作，GA
Worm Gear Operated

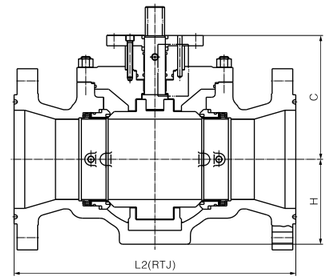

光杆带配盘，BSMP
Bare Stem with Mounting Pad

主要外形尺寸 Main External Dimensions

PN150/PN160/Class900

缩径 Reduced Bore　　单位Unit：mm

DN×DN'	NPS×NPS'	L (RF)	L1 (BW)	L2 (RTJ)	手柄 MA		蜗轮传动 GA		C	H	WT(Kg)	Torque (N·M)
					M	M0	G	G0				
50×40	$2\times1^1/_2$	368	368	371	234	650	--	--	173	68	60	163
80×50	3×2	381	381	384	251	650	--	--	190	83	75	228
100×80	4×3	457	457	460	305	800	--	--	225	110	120	512
150×100	6×4	610	610	613	--	--	335	400	268	127	270	946
200×150	8×6	737	737	740	--	--	396	400	321	170	460	1784
250×200	10×8	838	838	841	--	--	436	500	361	225	740	4116
300×250	12×10	965	965	968	--	--	445	500	368	260	1120	5910
350×250	14×10	1029	1029	1038	--	--	445	500	368	260	1498	5910
400×300	16×12	1130	1130	1140	--	--	535	500	460	310	1803	10137
450×350	18×14	1219	1219	1232	--	--	590	500	478	395	2450	14141
500×400	20×16	1321	1321	1334	--	--	625	600	513	450	3950	18866
600×500	24×20	1549	1549	1568	--	--	801	600	665	565	5380	28544
750×600	30×24	1880	1880	1902	--	--	953	700	793	660	9045	43276
900×750	36×30	2286	2286	2315	--	--	1110	800	950	830	15270	76000

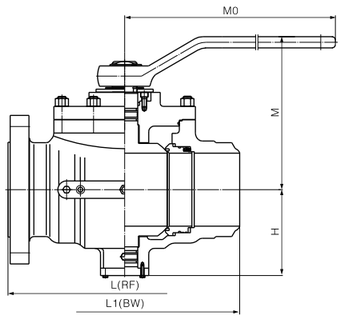

手动操作，MA
Lever–Operated

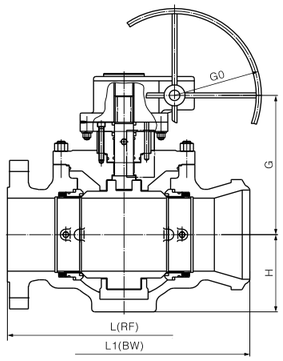

蜗轮传动操作，GA
Worm Gear Operated

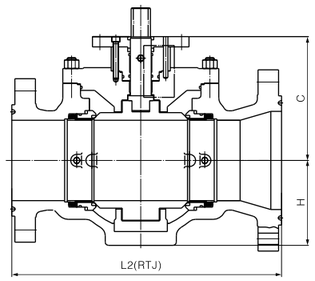

光杆带配盘，BSMP
Bare Stem with Mounting Pad

主要外形尺寸 Main External Dimensions

PN250/PN260/Class1500

全通径 Full Bore　　单位Unit：mm

DN	NPS	L (RF)	L1 (BW)	L2 (RTJ)	手柄 MA		蜗轮传动 GA		C	H	WT(Kg)	Torque (N·M)
					M	M0	G	G0				
40	$1^1/_2$	362	362	365	234	700	--	--	173	68	50	--
50	2	368	368	371	251	800	--	--	190	83	67	390
65	$2^1/_2$	419	419	422	278	800	--	--	202	98	75	448
80	3	470	470	473	--	--	310	500	243	110	130	931
100	4	546	546	549	--	--	357	500	290	142	260	1524
150	6	705	705	711	--	--	436	500	361	188	560	2934
200	8	832	832	841	--	--	505	500	430	250	870	7215
250	10	991	991	1000	--	--	568	500	493	300	1380	10990
300	12	1130	1130	1146	--	--	663	500	553	350	2290	16103
350	14	1257	1257	1276	--	--	705	500	593	440	2890	24518
400	16	1384	1384	1407	--	--	755	600	643	460	4700	29630
450	18	1537	1537	1559	--	--	849	600	713	560	5985	34392
500	20	1664	1664	1686	--	--	941	700	805	615	7770	40918
550	22	1820	1820	1842	--	--	1005	800	845	695	10240	46075
600	24	--	--	1972	--	--	1038	800	878	720	12980	65351

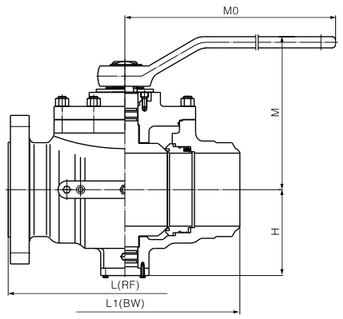

手动操作，MA
Lever–Operated

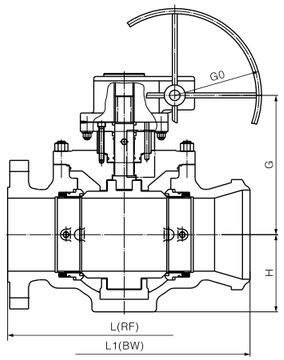

蜗轮传动操作，GA
Worm Gear Operated

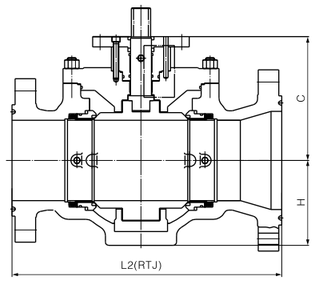

光杆带配盘，BSMP
Bare Stem with Mounting Pad

主要外形尺寸 Main External Dimensions

PN250/PN260/Class1500

缩径 Reduced Bore　　单位Unit：mm

DN×DN'	NPS×NPS'	L (RF)	L1 (BW)	L2 (RTJ)	手柄 MA		蜗轮传动 GA		C	H	WT(Kg)	Torque (N·M)
					M	M0	G	G0				
50×40	$2\times1^1/_2$	368	368	371	234	700	--	--	173	68	60	181
80×50	3×2	470	470	473	251	800	--	--	190	83	83	390
100×80	4×3	546	546	549	--	--	310	500	243	110	180	931
150×100	6×4	705	705	711	--	--	357	500	290	142	370	1524
200×150	8×6	832	832	841	--	--	436	500	361	188	670	2934
250×200	10×8	991	991	1000	--	--	505	500	430	250	1080	7215
300×250	12×10	1130	1130	1146	--	--	568	500	493	300	1780	10990
350×250	14×10	1257	1257	1276	--	--	568	500	493	300	2152	10990
400×300	16×12	1384	1384	1407	--	--	663	500	553	350	3228	16103
450×350	18×14	1537	--	1559	--	--	705	500	593	440	4027	24518
500×400	20×16	1664	--	1686	--	--	755	600	643	460	5841	29630
600×500	24×20	--	--	1972	--	--	941	700	805	615	9810	40918

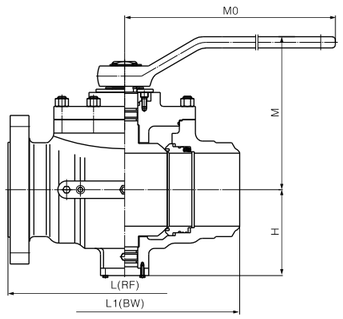

手动操作，MA
Lever-Operated

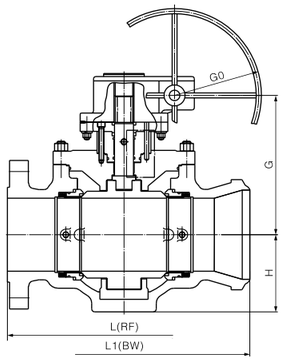

蜗轮传动操作，GA
Worm Gear Operated

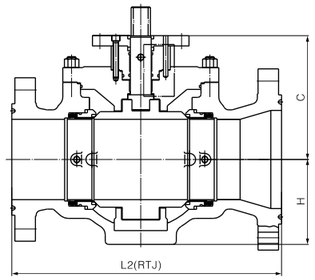

光杆带配盘，BSMP
Bare Stem with Mounting Pad

主要外形尺寸 Main External Dimensions

PN420/Class2500

全通径 Full Bore　　单位Unit：mm

DN	NPS	L (RF)	L1 (BW)	L2 (RTJ)	手柄 MA		蜗轮传动 GA		C	H	WT(Kg)	Torque (N·M)
					M	M0	G	G0				
40	$1^1/_2$	384	384	387	269	700	--	--	208	75	68	320
50	2	451	451	454	291	800	--	--	230	95	122	589
65	$2^1/_2$	508	508	514	305	1000	--	--	258	105	167	736
80	3	578	578	584	--	--	349	500	282	128	250	1577
100	4	673	673	683	--	--	411	500	336	165	468	1965
150	6	914	914	927	--	--	487	600	375	245	950	5501
200	8	1022	1022	1038	--	--	572	600	460	315	1790	11786
250	10	1270	1270	1292	--	--	625	700	513	350	2650	13222
300	12	1422	1422	1445	--	--	695	700	583	410	4300	20075

缩径 Reduced Bore　　单位Unit：mm

DN×DN'	NPS×NPS'	L (RF)	L1 (BW)	L2 (RTJ)	手柄 MA		蜗轮传动 GA		C	H	WT(Kg)	Torque (N·M)
					M	M0	G	G0				
50×40	$2\times1^1/_2$	451	451	454	269	700	--	--	208	75	82	320
80×50	3×2	578	578	584	291	800	--	--	230	95	175	589
100×80	4×3	673	673	683	--	--	349	500	282	128	320	1577
150×100	6×4	914	914	927	--	--	411	500	336	165	678	1965
200×150	8×6	1022	1022	1038	--	--	487	600	375	245	1126	5501
250×200	10×8	1270	1270	1292	--	--	572	600	460	315	2187	11786
300×250	12×10	1422	1422	1445	--	--	625	700	513	350	3340	13222

球阀流量系数规格 Ball Valve Flow Coefficient Specification

DN	NPS	PN	Class	PN	Class	PN	Class	PN	Class	PN	Class	PN	Class
		16/25	150	40	300	100	600	150	900	250	1500	420	2500
15	1/2	25		25		20		16		16		16	
20	3/4	56		56		40		34		34		32	
25	1	95		95		64		55		55		50	
40	11/2	308		308		308		165		165		160	
50	2	420		420		400		330		330		250	
65	21/2	690		690		610		520		510		320	
80×50	3×2	200		200		200		190		180		200	
80	3	1200		1050		1000		910		820		500	
100×80	4×3	600		600		600		590		550		560	
100	4	2200		2100		1850		1800		1700		1100	
150×100	6×4	800		800		790		790		780		745	
150	6	5150		5100		4600		4380		3800		2500	
200×150	8×6	2150		2150		2150		2150		2150		2150	
200	8	9500		9400		9000		8500		7400		5300	
250×200	10×8	4300		4300		4300		4450		4450		4100	
250	10	15000		15000		14700		14500		11500		8300	
300×250	12×10	7550		7550		7550		8000		9000		7550	
350×250	14×10	6000		6000		6000		6100		6100		--	
300	12	23000		23000		22500		21100		18000		13000	
350×300	14×12	14000		14000		14000		12800		13000		--	
400×300	16×12	9100		9100		9100		8900		8900		--	
350	14	28000		28000		28000		25000		21000		--	
400×350	16×14	15000		15000		15000		14200		14100		--	
400	16	37200		37200		37200		34500		27500		--	
450×400	18×16	21000		21000		21000		19200		19000		--	
500×400	20×16	15300		15300		15300		13800		12000		--	
450	18	49000		49000		49000		45000		37000		--	
500×450	20×18	28400		28400		28400		25000		25000		--	
500	20	59000		59000		59000		55200		47800		--	
600×500	24×20	28200		28200		28000		25100		20600		--	
550	22	68200		68200		68200		62000		54000		--	
600	24	92000		92000		92000		83800		70000		--	
750×600	30×24	36000		36000		36000		32900		--		--	
650	26	110000		110000		110000		98500		--		--	
700	28	121000		121000		121000		113000		--		--	
750	30	145000		144000		144000		130000		--		--	
900×750	36×30	64000		64000		64000		61500		--		--	
800	32	170000		170000		170000		151000		--		--	
900×800	36×32	87000		87000		87000		69500		--		--	
900	36	210000		210000		210000		198200		--		--	
1000	40	267500		267500		267500		--		--		--	
1050×900	42×36	96700		96700		96000		--		--		--	
1050	42	280000		280000		280000		--		--		--	
1200	48	384000		384000		384000		--		--		--	
1400×1050	56×42	89000		89000		89000		--		--		--	
1400	56	521000		521000		521000		--		--		--	